REPORT TO THE HEARING OFFICER

DATE ISSUED:	January 8, 2026	
HEARING DATE:	January 20, 2026	AGENDA ITEM: 8
PROJECT NUMBER:	PRJ2024-002530-(1)	
PERMIT NUMBER(S):	Conditional Use Permit RPPL2024003803	
SUPERVISORIAL DISTRICT:	1	
PROJECT LOCATION:	18958 Daisetta Street Suite 106, Rowland Heights	
OWNER:	New World RTC I LP	
APPLICANT:	Chengkui Yu / Late Night Bar	
CASE PLANNER:	Carl Vincent Nadela, AICP, Principal Regional Planner cnadela@planning.lacounty.gov	

RECOMMENDATION

The following recommendation is made prior to the public hearing and is subject to change based upon testimony and/or documentary evidence presented at the public hearing:

LA County Planning staff ("Staff") recommends **APPROVAL** of Project Number PRJ2024-002530-(1), Conditional Use Permit ("CUP") Number RPPL2024003803, based on the Findings (Exhibit C – Findings) contained within this report and subject to the Draft Conditions of Approval (Exhibit D – Conditions of Approval).

Staff recommends the following motion:

CEQA:

I, THE HEARING OFFICER, CLOSE THE PUBLIC HEARING AND FIND THAT THE PROJECT IS CATEGORICALLY EXEMPT PURSUANT TO STATE AND LOCAL CEQA GUIDELINES.

ENTITLEMENT:

I, THE HEARING OFFICER, APPROVE CONDITIONAL USE PERMIT NUMBER RPPL2024003803 SUBJECT TO THE ATTACHED FINDINGS AND CONDITIONS.

PROJECT DESCRIPTION

A. Entitlement Requested

- Conditional Use Permit ("CUP") for the continued sale of beer and wine for on-site consumption at an existing restaurant in the MXD (Mixed Use Development) Zone pursuant to County Code Section 22.26.030 (Mixed Use Development Zone).

B. Project

The Project, as originally requested by the applicant, is for the upgrade of an existing On-Sale Beer and Wine (Type 41) license to an On-Sale General (Type 47) ABC license to sell a full line of alcohol at the existing restaurant from 5:00 pm to 2:00 am, with accessory live entertainment (karaoke). Staff recommends approval only for the continued sale of beer and wine for on-site consumption at the existing restaurant from 10:00 am to 10:00 pm, with a prohibition on live entertainment, including karaoke.

The sale of a full-line of alcoholic beverages for on-site consumption at the subject restaurant was previously authorized by the approval of CUP 200900119 on July 7, 2010, but the restaurant owner only obtained a beer and wine license from the California Department of Alcoholic Beverage Control ("ABC") for the subject restaurant at that time. CUP 200900119 did not indicate specific hours for alcohol sales and the subject restaurant was offering beer and wine during the entirety of their operating hours of 5:00 pm to 2:00 am. The subject restaurant was also offering karaoke to its customers without the appropriate Planning approvals until they were advised by Staff to stop doing so on March 31, 2025. CUP 200900119 expired on July 7, 2020.

The applicant took over the operations of the subject restaurant in 2023. The applicant requested authorization to upgrade their existing license to sell a full line of alcohol from 5:00 pm to 2:00 am and to be permitted to have live entertainment, specifically, karaoke. Staff recommends that the new CUP be only for the sale of beer and wine for on-site consumption during the hours of 10:00 am to 10:00 pm and to include the prohibition of live entertainment, including karaoke. The applicant has since revised their application to only beer and wine sales for on-site consumption at the existing restaurant, but continues to request to be allowed to sell beer and wine from 5:00 pm to 2:00 am and to offer karaoke. The existing restaurant is not subject to the CUP and has no restrictions on its actual operating hours.

ABC records indicate that the Project Site is located in a Census Tract with an overconcentration of ABC licenses and in a High Crime Reporting District. ABC records also show a disciplinary history for the ABC license for the Project Site where the permittee was penalized for permitting a minor to consume alcohol on the premises in 2021. The LA County Sheriff's Department ("Sheriff") also report an unusually large number of major incidents at the subject restaurant and at the larger commercial complex where it is located, including assault with a deadly weapon, burglary and theft, among others, and

does not recommend any additional licensing (i.e., licensing beyond beer and wine) be granted to the subject restaurant. The Rowland Heights Community Coordinating Council ("RHCCC") also submitted correspondence opposing the upgrading of the existing beer and wine license to a license to sell a full line of alcohol.

The Project Site is located within an existing commercial center at the western terminus of Daisetta Street in the unincorporated community of Rowland Heights. It is located on a 0.71-acre lot that is a part of a larger commercial complex. The existing commercial building is located at the northwestern portion of the property, while the eastern and southern portions are developed with a parking lot with 35 parking spaces.

SUBJECT PROPERTY AND SURROUNDINGS

The following chart provides property data within a 500-foot radius:

LOCATION	EAST SAN GABRIEL VALLEY AREA PLAN LAND USE POLICY	ZONING	EXISTING USES
SUBJECT PROPERTY	CG (General Commercial)	MXD	Commercial center
NORTH	CG	MXD	Commercial centers
EAST	CG, H9 (Residential 9 – 0 to 9 Dwelling Units per Net Acre	MXD, R-1-6,000 (Single-Family Residence - 6,000 Square Feet Minimum Required Lot Area	Commercial center, single-family residences
SOUTH	CG	MXD	Commercial centers
WEST	CG, H18 (Residential 18 – 0 to 18 Dwelling Units per Net Acre)	MXD, R-3 (Limited Density Multiple Residence)	Golf course, mobilehome park

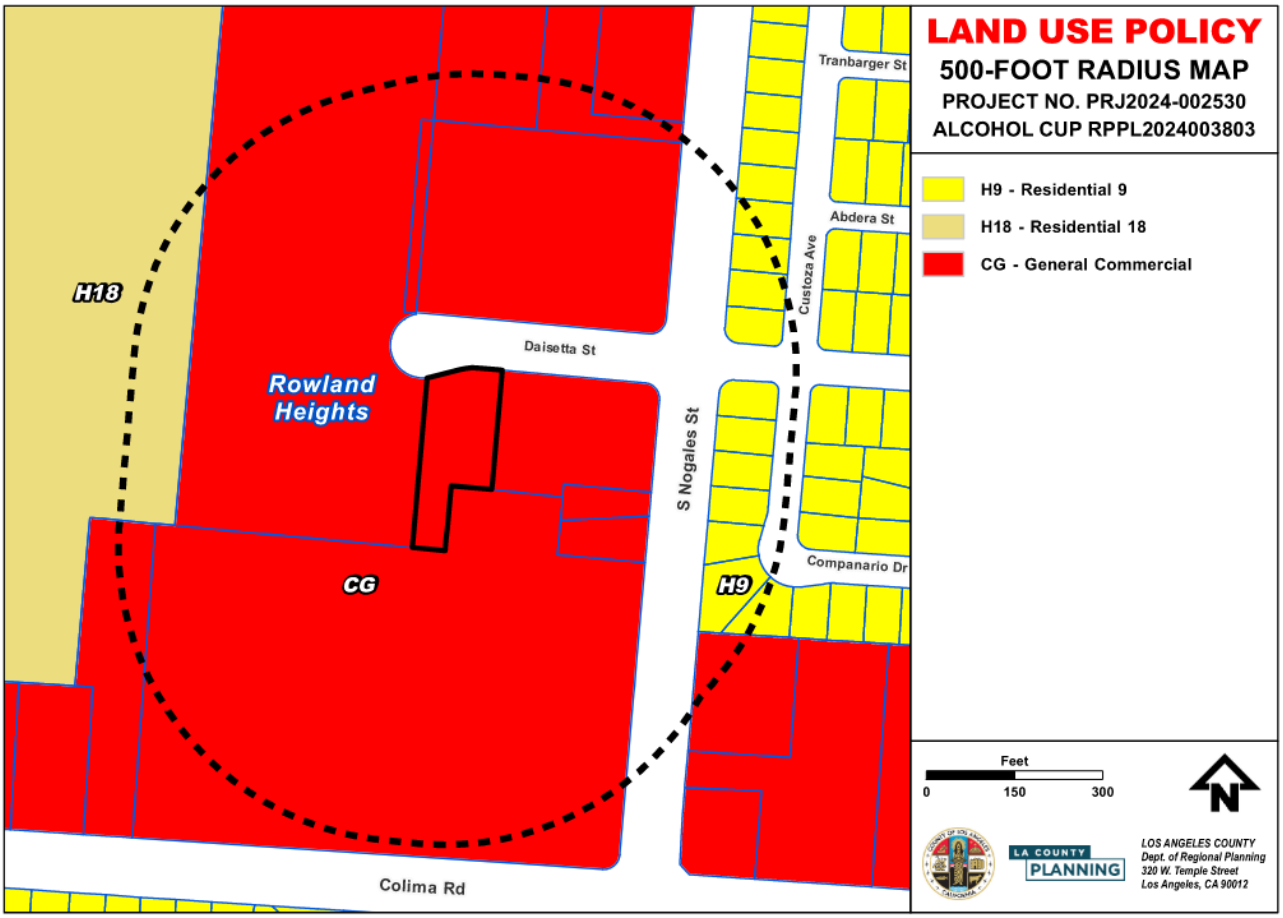
LAND USE POLICY
500-FOOT RADIUS MAP
PROJECT NO. PRJ2024-002530
ALCOHOL CUP RPPL2024003803
H9 - Residential 9
H18 - Residential 18
CG - General Commercial
H18
Rowland Heights
CG
H9
Daisetta St
S Nogales St
Custoza Ave
Tranbarger St
Abdera St
Companario Dr
Colima Rd
Feet
0
150
300
N
LA COUNTY PLANNING
LOS ANGELES COUNTY
Dept. of Regional Planning
320 W. Temple Street
Los Angeles, CA 90012

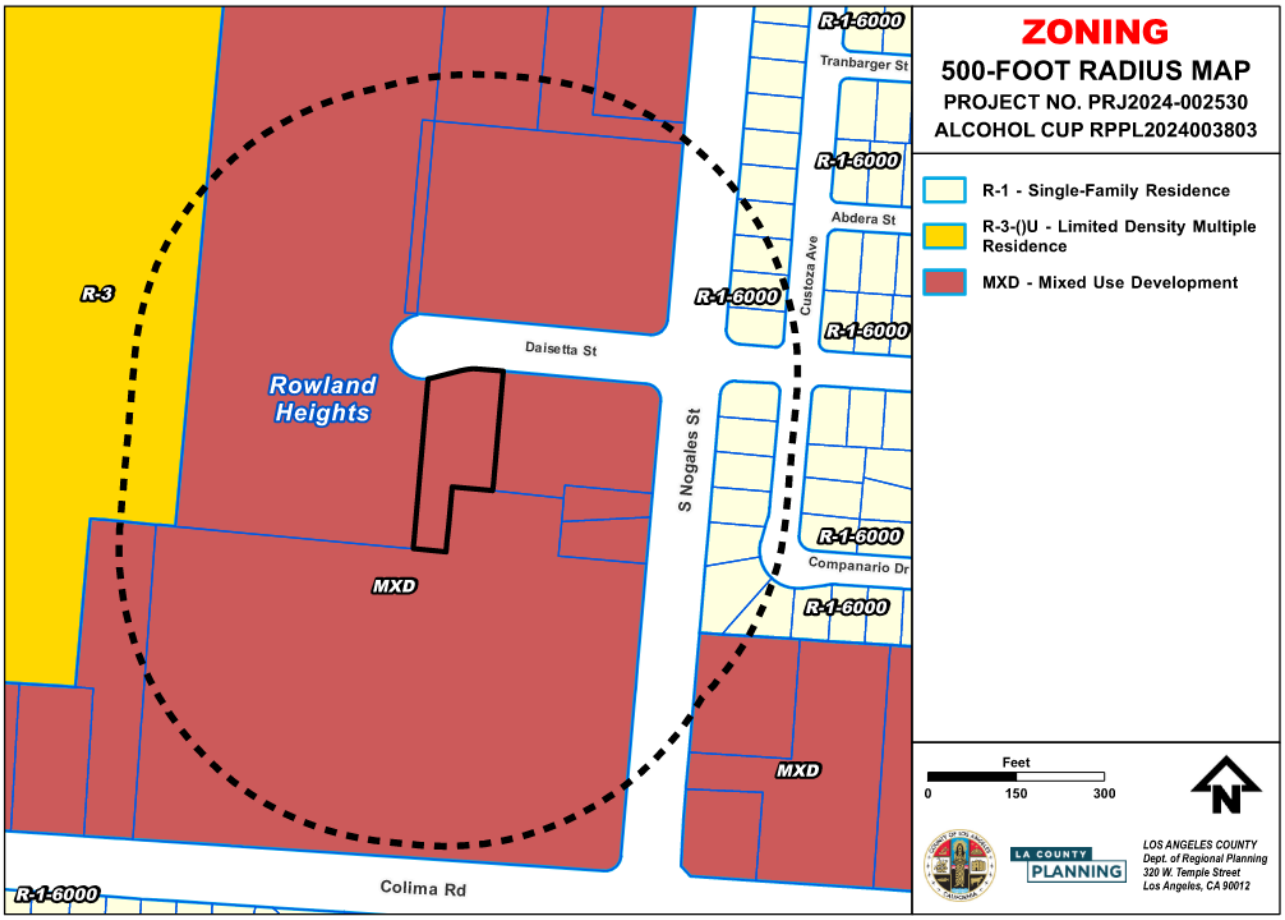
ZONING
500-FOOT RADIUS MAP
PROJECT NO. PRJ2024-002530
ALCOHOL CUP RPPL2024003803
R-1 - Single-Family Residence
R-3-()U - Limited Density Multiple Residence
MXD - Mixed Use Development
R-1-6000
Tranbarger St
Abdera St
Custoza Ave
R-3
Daisetta St
Rowland Heights
S Nogales St
MXD
Companario Dr
Colima Rd
Feet
0
150
300
N
LA COUNTY PLANNING
LOS ANGELES COUNTY
Dept. of Regional Planning
320 W. Temple Street
Los Angeles, CA 90012

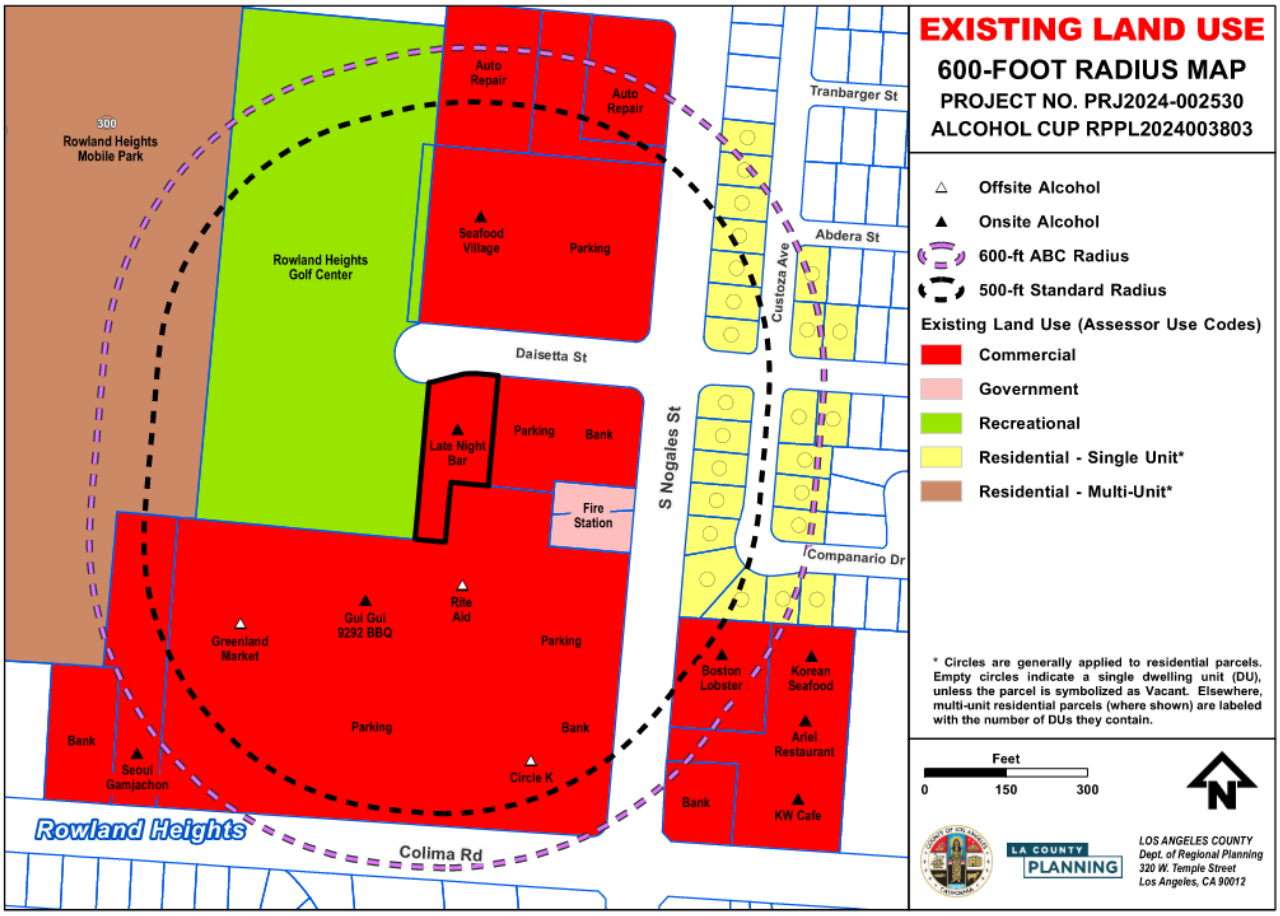

PROPERTY HISTORY

A. Zoning History

ORDINANCE NO.	ZONING	DATE OF ADOPTION
5122	A-1-10,000 (Light Agricultural – 10,000 square feet Minimum Required Lot Area)	5/25/1948
8841	C-3 (General Commercial)	5/11/1965
12143	C-3-BE (General Commercial – Billboard Exclusion)	4/24/1980
2024-0030Z	MXD	5/21/2024

B. Previous Cases

CASE NO.	REQUEST	DATE OF ACTION
CUP 200900119	Sale of a full line of alcohol at an existing restaurant	7/7/2010
Plot Plan ("PP") 200900033	Tenant improvement for new Japanese restaurant	4/16/2009
PP 200601003	New retail and office structure	4/10/2007

C. Violations

CASE NO.	VIOLATION	OPENED
RPCE2024002577	Unpermitted Alcohol and Karaoke Establishment without CUP	5/9/2024 (Active)

ANALYSIS

A. Land Use Compatibility

The subject restaurant is located in a commercial complex located at the western terminus of Daisetta Street. This commercial complex includes restaurants, retail stores, offices and service establishments. To the north, south and immediate east are other commercial complexes with a similar tenant mix. To the immediate west is a golf driving range. Further to the east are single-family residences while further to the west is a mobilehome park. These residential uses are sufficiently buffered from the Project Site by concrete block walls, landscaping, existing structures, parking lots and the 100-foot width of Nogales Street. With the establishment of adequate operational controls such as a restriction on the allowed hours of alcohol sales, the prohibition of offsite consumption of alcohol, and the prohibition of live entertainment, the proposed continued accessory sale of beer and wine for onsite consumption at the existing restaurant at the subject location is compatible with all these surrounding uses in the area.

B. Neighborhood Impact (Need/Convenience Assessment)

The continued sale of beer and wine for on-site consumption at the Project Site is appropriate and will not likely result in a nuisance situation, provided that the sales are conducted in compliance with the recommended conditions of Project approval. The existing restaurant will offer a full dining experience and customers generally expect beer and wine as a service option.

There are four businesses with on-site alcoholic beverage licenses within a 600-foot radius of the Project Site, all of which are. There are no churches, parks, playgrounds, or schools within a 600-foot radius of the Project Site. In the immediate vicinity of the site are various commercial and recreational uses. Further away are single-family residences and a mobilehome park that are sufficiently buffered from the Project Site by concrete block

walls, landscaping, existing structures, parking lots and the 100-foot width of Nogales Street. The continued sale of beer and wine at the existing restaurant is not likely to adversely impact the neighborhood, provided that the sales are conducted in compliance with the recommended conditions of Project approval.

The Project Site is located in Crime Reporting District No. 2931 and, in a report received by Staff on February 11, 2025, the California Department of Alcoholic Beverage Control ("ABC") determined it is a high crime reporting district. The report is attached as Exhibit I. The Project Site is located near the intersection of Nogales Street and Colima Road, which has a large concentration of retail establishments and is a destination for nearby residents and regional visitors. This concentration of retail establishments tends to lead to a higher number of reported crimes in Crime Reporting District No. 2931 compared to the average crime reporting district. Furthermore, the County Sheriff ("Sheriff"), in a letter dated October 16, 2025, indicated that the location has more than reasonable number of calls of service and does not recommend any additional licensing be granted for the establishment. The letters is also attached as Exhibit I.

According to the ABC, six licenses for alcohol sales for onsite consumption are allowed in the Census Tract where the Project Site is located (4082.13), while 32 such licenses are currently active, including the existing beer and wine license of the subject restaurant. This indicates that the Project Site is located in an area where there is an overconcentration of alcohol sales as defined and determined by ABC.

Pursuant to County Code Section 22.140.030.F.2.a.i (Public Convenience or Necessity), the Commission must make a finding of public convenience or necessity when a requested use is located in a high crime reporting district or in an area where there is an overconcentration of alcohol sales as defined and determined by ABC. The public convenience of allowing patrons of the subject restaurant to partake of beer and wine together with their regular meals at the restaurant outweighs the facts that the Project Site is located in a high crime reporting district and in an area where there is an overconcentration of alcohol sales as defined and determined by ABC. However, these factors need to be balanced with the adverse effects of the easy availability of alcoholic beverages either too early or too late in the day (see Exhibit L). There has also been adverse effects from the existing restaurant's sale of beer and wine from 5:00 pm to 2:00 am, which is what the applicant is requesting. Because of these documented adverse effects, Staff recommends that the Hearing Officer can make a finding of public convenience or necessity only if the sale of alcoholic beverages for on-site consumption is limited to 10 a.m. to 10 p.m. Monday through Sunday, which precludes sales either too early or too late in the day. Accordingly, one of the recommended conditions of Project approval will limit the sale of alcoholic beverages for on-site consumption from 10 a.m. to 10 p.m. Monday through Sunday.

Recommended Hours of Alcohol Sales

As noted above, the applicant is requesting beer and wine sales from 5:00 pm to 2:00 am, daily. Staff recommends that the hours of beer and wine sales be limited to only 10:00 am to 10:00 pm, daily.

C. Design Compatibility

Pursuant to Section 22.26.030 (Mixed Use Development Zone) of the County Code, the Project Site is subject to the development standards of the MXD Zone. The commercial complex and the subject tenant space as a restaurant were authorized in 2007 and 2009 with the approval of PP 200601003 and PP 200900033, respectively. The existing commercial building and the subject restaurant has been in existence at the site for almost 20 years and its design is well integrated into the architectural character in the area. No physical development is proposed by the Project. The Project Site is also located within the East San Gabriel Valley Area Standards District ("PASD") and Rowland Heights Community Standards District ("CSD"), but no relevant regulations apply to this Project.

GENERAL PLAN/COMMUNITY PLAN CONSISTENCY

The Project is consistent with applicable goals and policies of the Los Angeles County General Plan and East San Gabriel Valley Area Plan. Consistency findings can be found in the attached Findings (Exhibit C – Findings).

ZONING ORDINANCE CONSISTENCY

The Project complies with all applicable zoning requirements, including the provisions and requirements of the East San Gabriel Valley PASD and Rowland Heights CSD. Consistency findings can be found in the attached Findings (Exhibit C – Findings).

BURDEN OF PROOF

The applicant is required to substantiate all facts identified by Sections 22.158.050 (Conditional Use Permits Findings and Decisions) and 22.140.030 (Alcoholic Beverage Sales) of the County Code. The Burden of Proof with applicant's responses is attached (Exhibit E – Applicant's Burden of Proof). Staff is of the opinion that the applicant has met the burden of proof.

ENVIRONMENTAL ANALYSIS

Staff recommends that this project qualifies for a Categorical Exemption (Class 1 Exemption, Existing Facilities) under the California Environmental Quality Act ("CEQA") and the County environmental guidelines. The Project is for the continued accessory sale of beer and wine for on-site consumption at an existing restaurant located within an existing commercial complex. No modifications or physical development are proposed. The Project Site is not located within

or in close proximity to a historical resource, a hazardous waste site, or a scenic highway. No significant effect due to "unusual circumstances" and no cumulative impacts are anticipated. No exceptions to the categorical exemption apply to the Project as per Section 15300.2 of the California Code of Regulations. Therefore, staff recommends that the Hearing Officer determine that the project is categorically exempt from CEQA. An environmental determination (Exhibit F – Environmental Determination) was issued for the Project.

COMMENTS RECEIVED

A. County Department Comments and Recommendations

The County Sheriff's Department, Walnut/Diamond Bar Station, in a letter dated October 15, 2025, does not recommend any additional licensing be granted for the establishment.

B. Other Agency Comments and Recommendations

Staff has not received any comments from non-County Agencies at the time of report preparation.

C. Public Comments

Rowland Heights Community Coordinating Council ("RHCCC"), in a letter dated September 30, 2025, indicated that the RHCCC opposes the upgrade of the existing beer and wine license of the establishment to a license to sell a full line of alcohol.

Report Reviewed By: Maria Masis, AICP, Supervising Regional Planner

Report Approved By: Susan Tae, AICP, Assistant Administrator

LIST OF ATTACHED EXHIBITS	
EXHIBIT A	Plans
EXHIBIT B	Project Summary Sheet
EXHIBIT C	Draft Findings
EXHIBIT D	Draft Conditions of Approval
EXHIBIT E	Applicant's Burden of Proof
EXHIBIT F	Environmental Determination
EXHIBIT G	Informational Maps
EXHIBIT H	Photos
EXHIBIT I	Agency Correspondence
EXHIBIT J	Public Correspondence
EXHIBIT K	Previous Approval (CUP 200900119)
EXHIBIT L	References

1. "Effectiveness of Policies Restricting Hours of Alcohol Sales in Preventing Excessive Alcohol Consumption and Related Harms". US National Library of Medicine National Institutes of Health. 2010. https://www.ncbi.nlm.nih.gov/pubmed/21084080
2. "International alcohol control study: pricing data and hours of purchase predict heavier drinking". US National Library of Medicine National Institutes of Health. https://www.ncbi.nlm.nih.gov/pubmed/24588859
3. "How To Use Local and Land Use Powers to Prevent Underage Drinking". Pacific Institute for Research and Evaluation, August 2013 (https://www.ojp.gov/ncjrs/virtual-library/abstracts/how-use-local-regulatory-and-land-use-powers-prevent-underage-0#:~:text=This%20can%20be%20done%20by%20restricting%20the%20location%2Fnumber,restricting%20minors%27%20access%20to%20non-commercial%20sources%20of%20alcohol)

Late Night Bar

18958 Daisetta St # 106, Rowland Heights, CA 91748

ACCESSIBILITY NOTE

TURNING SPACE
1. Circular turning spaces shall be a space of 60 inches diameter minimum and may include knee and toe clearance complying with 11B-306 Knee and Toe Clearance. §11B-304.3.1
2. T-Shaped turning spaces shall be a T-shaped space within a 60 inch square minimum with arms and base 36 inches wide minimum. Each arm of the T shall be clear of obstructions 12 inches minimum in each direction and the base shall be clear of obstructions 24 inches minimum. §11B-304.3.2, Figure 11B-304.3.2
KNEE AND TOE CLEARANCE
1. For lavatories and built-in dining and work surfaces required to be accessible, toe clearance shall be provided that is 30 inches in width and 9 inches in height above the finish floor or ground for a depth of 19 inches minimum. §11B-306.2.1
2. Toe clearance shall extend 19 inches maximum under lavatories for toilet and bathing facilities and 25 inches maximum under other elements. §11B-306.2.2
3. At lavatories in toilet and bathing facilities, knee clearance shall be provided that is 30 inches in width for a depth of 11 inches at 9 inches above the finish floor or ground and for a depth of 8 inches at 27 inches above the finish floor or ground increasing to 29 inches high minimum above the finish floor or ground at the front edge of a counter with a built-in lavatory or at the front edge of a wall-mounted lavatory fixture. §11B- 306.3.3, Figure 11B-306.3(c)
4. At dining and work surfaces required to be accessible, knee clearance shall be provided that is 30 inches in width at 27 inches above the finish floor or ground for a depth of at least 19 inches. §11B-306.3
DOORS, DOORWAYS, AND GATES
1. Doors, doorways, and gates providing user passage shall be provided in accordance with 11B-206.5 Doors, Doorways, and Gates. §11B-206.5
2. Doors, doorways and gates that are part of an accessible route shall comply with 11B-404 Doors, Doorways, and Gates. §11B-404.1
3. Door openings shall provide a clear width of 32 inches minimum. Clear openings of doorways with swinging doors shall be measured between the face of the door and the stop, with the door open 90 degrees. Openings more than 24 inches deep shall provide a clear opening of 36 inches minimum. There shall be no projections into the required clear opening width lower than 34 inches above the finish floor or ground. Projections into the clear opening width between 34 inches and 80 inches above the finish floor or ground shall not exceed 4 inches. §11B-404.2.3
4. Swinging doors and gates shall have maneuvering clearances complying with Table 11B-404.2.4.1. §11B- 404.2.4.1
5. Doorways less than 36 inches wide without doors or gates, sliding doors, or folding doors shall have maneuvering clearances complying with Table 11B-404.2.4.2. §11B-404.2.4.2
6. Maneuvering clearances for forward approach shall be provided when any obstruction within 18 inches of the latch side an interior doorway, or within 24 inches of the latch side of an exterior doorway, projects more than 8 inches beyond the face of the door, measured perpendicular to the face of the door or gate. §11B- 404.2.4.3
7. Thresholds, if provided at doorways, shall be 1⁄2 inch high maximum. Raised thresholds and changes in level at doorways shall comply with 11B-302 Floor or Ground Surfaces and 11B-303 Changes in Level. §11B- 404.2.5
8. Handles, pulls, latches, locks, and other operable parts on doors and gates shall comply with 11B-309.4 Operation. Operable parts of such hardware shall be 34 inches minimum and 44 inches maximum above the finish floor or ground. Where sliding doors are in the fully open position, operating hardware shall be exposed and usable from both sides. §11B-404.2.7
9. The force for pushing or pulling open a door or gate other than fire doors shall be as follows: §11B-404.2.9
a. Interior hinged doors and gates: 5 pounds maximum.
b. Sliding or folding doors: 5 pounds maximum.
c. Required fire doors: the minimum opening force allowable by the appropriate administrative authority, not to exceed 15 pounds.
d. Exterior hinged doors: 5 pounds maximum.
10. Swinging door and gate surfaces within 10 inches of the finish floor or ground measured vertically shall have a smooth surface on the push side extending the full width of the door or gate. Parts creating horizontal or vertical joints in these surfaces shall be within 1/16 inch of the same plane as the other and be free of sharp or abrasive edges. Cavities created by added kick plates shall be capped. §11B-404.2.10
RAMPS
1. Ramp runs shall have a running slope not steeper than 1:12 (8.33%). §11B-405.2
2. Cross slope of ramp runs shall not be steeper than 1:48 (2.083%). §11B-405.3
3. Floor or ground surfaces of ramp runs shall comply with 11B-302 Floor or Ground Surfaces. Changes in level other than the running slope and cross slope are not permitted on ramp runs. §11B-405.4
4. The clear width of a ramp run shall be 48 inches minimum. §11B-405.5
5. The rise for any ramp run shall be 30 inches maximum. §11B-405.6
6. Ramps shall have landings at the top and the bottom of each ramp run. §11B-405.7
7. Landings shall comply with 11B-302 Floor or Ground Surfaces. Changes in level are not permitted. §11B- 405.7.1
8. The landing clear width shall be at least as wide as the widest ramp run leading to the landing. §11B- 405.7.2
9. Top landings shall be 60 inches wide minimum. §11B-405.7.2.1
10. The landing clear length shall be 60 inches long minimum. §11B-405.7.3
11. Bottom landings shall extend 72 inches minimum in the direction of ramp run. §11B-405.7.3.1
12. Ramps that change direction between runs at landings shall have a clear landing 60 inches minimum by 72 inches minimum in the direction of downward travel from the upper ramp run. §11B-405.7.4
13. Where doorways are located adjacent to a ramp landing, maneuvering clearances required by 11B-404.2.4 and 11B-404.3.2 shall be permitted to overlap the required landing area. Doors, when fully open, shall not reduce the required ramp landing width by more than 3 inches. Doors, in any position, shall not reduce the minimum dimension of the ramp landing to less than 42 inches. §11B-405.7.5
14. Ramp runs shall have compliant handrails per 11B-505 Handrails. §11B-405.8
15. Edge protection complying with 11B-405.9.2 Curb or Barrier shall be provided on each side of ramp runs
and at each side of ramp landings. §11B-405.9 (See exceptions)
16. A curb, 2 inches high minimum, or barrier shall be provided that prevents the passage of a 4 inch diameter sphere, where any portion of the sphere is within 4 inches of the finish floor or ground surface. To prevent wheel entrapment, the curb or barrier shall provide a continuous and uninterrupted barrier along the length of the ramp. §11B-405.9.2
17. Landings subject to wet conditions shall be designed to prevent the accumulation of water. §11B-405.10
CURB RAMPS, BLENDED TRANSITIONS AND ISLANDS
1. Perpendicular ramp runs shall have a running slope not steeper than 1:12 (8.33%). §11B-406.2.1
2. For perpendicular ramps, where provided, curb ramp flares shall not be steeper than 1:10. §11B-406.2, Figure 11B-406.2.2
3. The running slope of the curb ramp segments shall be in-line with the direction of sidewalk travel. Ramp runs shall have a running slope not steeper than 1:12 (8.33%). §11B-406.3.1, Figure 11B-406.3.2
4. A turning space 48 inches minimum by 48 inches minimum shall be provided at the bottom of the curb ramp. The slope of the turning space in all directions shall be 1:48 maximum (2.083%). §11B-406.3.2
5. Blended transition ramps hall have a running slope not steeper than 1:20 (5%). §11B-406.4.1
6. Curb ramps and the flared sides of curb ramps shall be located so that they do not project into vehicular traffic lanes, parking spaces, or parking access aisles. Curb ramps at marked crossings shall be wholly contained within the markings, excluding any flared sides. §11B-406.5.1
7. The clear width of curb ramp runs (excluding any flared sides), blended transitions, and turning spaces shall be 48 inches minimum. §11B-406.5.2
8. Landings shall be provided at the tops of curb ramps and blended transitions (parallel curb ramps shall not be required to comply). The landing clear length shall be 48 inches minimum. The landing clear width shall be at least as wide as the curb ramp, excluding any flared sides, or the blended transition leading to the landing. The slope of the landing in all directions shall be 1:48 (2.083%) maximum. §11B-406.5.3
9. Grade breaks at the top and bottom of curb ramp runs shall be perpendicular to the direction of the ramp run. Grade breaks shall not be permitted on the surface of ramp runs and turning spaces. Surface slopes that meet at grade breaks shall be flush. §11B-406.5.6
10. The cross slope of curb ramps and blended transitions shall be 1:48 (2.083%) maximum. §11B-406.5.7
11. Counter slopes of adjoining gutters and road surfaces immediately adjacent to and within 24 inches of the curb ramp shall not be steeper than 1:20 (5%). The adjacent surfaces at transitions at curb ramps to walks, gutters, and streets shall be at the same level. §11B-406.5.8
12. The bottom of diagonal curb ramps shall have a clear space 48 inches minimum outside active traffic lanes of the roadway. Diagonal curb ramps provided at marked crossings shall provide the 48 inches minimum clear space within the markings. §11B-406.5.9
13. Curb ramps and blended transitions shall have detectable warnings complying with 11B-705 Detectable Warnings. §11B-406.5.12
14. Raised islands in crossings shall be cut through level with the street or have curb ramps at both sides. The clear width of the accessible route at islands shall be 60 inches wide minimum. Where curb ramps are provided, they shall comply with 11B-406 Curb Ramps, Blended Transitions and Islands. Landings complying with 11B-406.5.3 Landings and the accessible route shall be permitted to overlap. Islands shall have detectable warnings complying with 11B-705 Detectable Warnings and Detectable Directional Texture. §11B-406.6, Figure 11B-406.6
GENERAL SITE AND BUILDING ELEMENTS
1. Where parking spaces are provided, accessible parking spaces shall be provided in number and kind required per Section 11B-208 Parking Spaces. §11B-208.1
2. Where passenger loading zones, drop-off zones, and/or bus stops are provided, accessible passenger loading zones, drop-off zones, and/or bus stops are required.

ENVIRONMENTAL HEALTH NOTES

The following Environmental Health notes are to be placed on your plans to assist in providing clear direction between those involved in the actual construction of a food facility including contractors and Environmental Health Specialists. These notes will encompass most food facilities but are not meant to be comprehensive for all food facilities or situations:

1. A concrete slab is provided for trash, garbage, and grease container. If walls enclose area, the interior wall surfaces will be smooth, sealed and washable (e.g., plastered smooth and painted, etc.).
2. All food-related and utensil-related equipment shall meet or be equivalent to sanitation standards established by an American National Standards Institute (ANSI) accredited program.
3. All floor mounted equipment will be installed on minimum 6" sanitary legs, castors, or completely sealed in position on a 4 " high curb with continuously coved base. Countertop equipment will be on 4-inch sanitary legs or sealed to the counter unless readily movable.
4. If soft drink, ice or other dispensers are self-service, or if refills are provided they must be push button types, or lever types where the lever contacts the container at least one inch below the rim.
5. Any openable windows vent openings or other similar openings must be provided with tight fitting screens of minimum 16-mesh to the inch. Windows to be fixed at food prep, utensil-washing, open food and utensil storage areas.
6. All exterior doors open outward and are self-closing and tight fitting.
7. Bi-fold, French, accordion style and roll-up doors cannot open into the food prep, utensil washing or unpackaged food service areas.
8. Toilet room and dressing room doors must be self-closing, tight fitting.
9. Delivery doors to have air curtain fans that span the width over the door. The fan must activate via a microswitch providing a minimum velocity of 1600 fpm measured 3 feet above the ground.
10. A minimum of 10 foot-candles of light measured 30" off floor is provided in walk-in refrigerated storage and dry storage rooms and at least 20-foot candles is provided where food is provided for consumer self-service, where fresh produce or prepackaged foods are sold or offered for consumption; inside equipment such as reach-in and under-counter refrigerators; in areas used for handwashing, warewashing, equipment and utensil storage, and in toilet rooms.
11. A minimum of 50 foot-candles of light measured 30" off floor is provided when working with food or working with utensils or equipment such as knives, slicers, grinders, or saws where employee safety is a factor and in all areas during periods of cleaning.
12. Shattershields for all lights above food preparation, work, and storage areas will be provided.
13. All warewashing sinks to have 3 compartments that are a minimum size of at least 18"x18"x12" deep (or 16"x20"x12" deep) with a minimum 18" drainboard at each end. If against a wall, it must have an 8" integral backsplash. However, it must be capable of accommodating the largest utensil to be washed. A warewashing machine does not substitute for the sink requirement.
14. Sinks to have spout(s) capable of reaching each compartment.
15. Food prep sink compartment(s) to be at least 18"x18"x12" deep (or 16"x20"x12" deep) with a minimum 18" drainboard. Separate food prep sinks to be provided for meats and produce.
16. The 3 or 4 compartment bar sink to be at least 12"x12"x10" deep (or 10"x14"x10" deep) with a minimum 18" drainboard at each end.
17. A separate wet waste dump fixture shall be provided for disposal of drink or waste ice or coffee waste.
18. Each handwashing sink must have permanently mounted single-service soap and paper towel dispensers.
19. The hot water heater will be a commercial type capable of constantly supplying hot water at a temperature of 120ºF to all sinks. In sizing the water heater, the peak hourly demand for all sinks, etc., are added together to determine the minimum required recovery rate.
20. All lavatories or hand sinks will have a combination faucet or premixing faucet capable of supplying water tempered to 100ºF. Self-closing or metered faucet to provide at least 15 seconds of water without reactivation.
21. All plumbing, electrical and gas lines shall be concealed within the building structure to as great an extent as possible. All exposed conduits, plumbing, etc. shall be installed at least 6" off floor and 3/4" from walls using standoff brackets.
22. Conduits, plumbing or piping cannot be installed across any aisle way, traffic area or door opening.
23. Multiple runs or clusters of conduit or pipelines shall be furred in or encased in an approved sealed enclosure.
24. All liquid waste shall be drained by means of indirect waste pipes into a floor sink. Floor sinks are to be installed flush with the finished floor surface and have suitable easily removable safety cover grates.
25. Floor sink to be 50% exposed when no access is provided for cleaning or be in line with the front face of elevated freestanding equipment.
26. Approved backflow prevention devices shall be properly installed upstream of any potential hazard between the potable water supply and a source of contamination. Hoses shall not be attached to a faucet or hose bibb unless an approved backflow preventer is provided.
27. Water supply to carbonators shall be protected by an approved reduced pressure principle backflow preventer. The relief valve shall drain indirectly to sewer with a legal air gap.
28. For cleaning floor mats, the janitorial sink to be a minimum 24" by 36" floor-mounted type. Mops shall be placed in a position that allows them to air-dry without soiling walls, equipment, or supplies.
29. The janitorial sink faucet will have a threaded outer lip for hose attachment and an approved backflow prevention device. No chemical dispensing systems or shutoff valves to be attached to mop sink faucet outlet (unless a "sidekick" plumbing device is installed).
30. No condensate or wastewater including HVAC will drain into the janitorial sink.
31. Grease trap to be located outside the food service activity area, flush with the finished floor when indoors. Local wastewater district or building department to be contacted for grease removal requirements.
32. Floor drains shall be installed in floors that are water-flushed for cleaning and in areas where pressure spray methods for cleaning equipment are used, in restrooms, janitorial rooms, sculleries, and at bars with warewashing. Floor surfaces in areas pursuant to this shall be sloped 1:50 to the floor drains.
33. Adequate ventilation is to be provided to all toilet rooms, janitor closets with mop sinks, and indoor trash rooms and in dressing/change room(s).
34. The floor finish will have a smooth surface under all equipment and walkways will have a light texture only.
35. The paint used on walls and ceilings of all kitchen, food preparation, work, and storage areas will be a gloss or semi-gloss enamel. Finish material shall be a light color in food prep areas for easy cleaning.
36. Prior to installation, samples of finishes to be submitted to Environmental Health for approval as needed.
37. Cold storage rooms shall be provided with a section of shelving installed to hold shallow cool down pans -not to exceed 4" in height. Space between shelving to be at least 8" high.
38. Backup dry storage shelving shall be a minimum of 96 linear feet (measured with tiers) or 25% of kitchen, food prep, and work areas, whichever is greater. Shelving shall be at least 18 inches deep and start a minimum six inches off the floor surface.
39. Shelving over wet areas (sinks, mop sinks etc.) and food prep surfaces will be metal.
40. All seams, gaps, openings to be properly sealed.

GENERAL NOTE

1. THE CONTRACTOR SHALL PROVIDE SAFE AND CONTINUOUS PASSAGE FOR LOCAL PEDESTRIAN AND VEHICULAR TRAFFIC AT ALL TIMES.
2. SHOULD ANY OF THE EXISTING UTILITIES OR ANY OTHER FACILITIES CONFLICT WITH THE PROPOSED WORK AS SHOWN ON THE PLANS, THE CONTRACTOR SHALL NOTIFY THE ARCHITECT AND AWAIT THE RELOCATION AND/OR ALTERNATE DESIGN.
3. THE CONTRACTOR SHALL SO CONDUCT HIS OPERATIONS AS TO OFFER THE LEAST POSSIBLE OBSTRUCTION AND INCONVENIENCE TO THE PUBLIC, AND HE SHALL HAVE UNDER CONSTRUCTION NO GREATER LENGTH OR AMOUNT OF WORK THAN HE CAN EXECUTE PROPERLY WITH DUE REGARD TO THE RIGHTS OF THE PUBLIC.
4. CONVENIENT ACCESS T0 DRIVEWAYS AND BUILDINGS ALONG THE LINE OF WORK SHALL BE MAINTAINED, AND TEMPORARY CROSSINGS SHALL BE PROVIDED AND MAINTAINED IN GOOD CONDITIONS. NOT MORE THAN ONE CROSSING OR INTERSECTING STREET OR ROAD SHALL BE CLOSED AT ANY ONE TIME WITHOUT THE APPROVAL OF THE OWNER.
5. THE CONTRACTOR SHALL PROVIDE AND MAINTAIN SUCH FENCES, BARRIERS, DIRECTIONAL SIGNS. LIGHTS. AND FLAG MEN AS ARE NECESSARY TO GIVE ADEQUATE WARNING TO THE PUBLIC AT ALL TIMES OF ANY DANGEROUS CONDITIONS TO BE ENCOUNTERED AS A RESULT OF THE CONSTRUCTION WORK AND TO GIVE DIRECTIONS TO THE PUBLIC.
6. THE CONTRACTOR SHALL EXERCISE DUE CARE TO AVOID INJURY TO EXISTING IMPROVEMENTS OR FACILITIES, UTILITY FACILITIES, ADJACENT PROPERTY, AND TREES AND SHRUBBERY.CONTRACTOR SHALL NOTIFY UNDERGROUND SERVICE ALERT PRIOR TO ENTERING PROJECT SITE.
7. IN ACCORDANCE WITH GENERALLY ACCEPTED CONSTRUCTION PRACTICES, THE CONTRACTOR SHALL BE SOLELY AND COMPLETELY RESPONSIBLE FOR CONDITIONS OF THE JOB SITE, INCLUDING SAFETY OF ALL PERSONS AND PROPERTY DURING PERFORMANCE OF THE WORK, AND THE CONTRACTOR SHALL FULLY COMPLY WITH ALL STATE AND FEDERAL LAWS, RULES, REGULATIONS, AND ORDERS RELATING TO SAFETY TO THE PUBLIC AND WORKERS.
8. ALL WORK RELATED TO ELECTRICAL SERVICE SHALL BE PERFORMED IN CONFORMANCE WITH THE GOVERNING POWER COMPANY REQUIREMENTS.
9. ALL WORK EMBODIED IN THESE PLANS SHALL BE DONE IN ACCORDANCE WITH - APPLICABLE PROVISIONS OF THE CURRENT GOVERNING BUILDING CODE.
10. THE ARCHITECT SHALL NOT BE RESPONSIBLE IN ANY WAY FOR THE CONTRACTORS AND SUBCONTRACTORS' COMPLIANCE WITH THE "OCCUPATIONAL HEALTH AND SAFETY REGULATIONS OF U.S. DEPARTMENT LABOR OR WITH THE STATE OF CALIFORNIA DEPARTMENT OF INDUSTRIAL RELATIONS "CONSTRUCTION SAFETY ORDERS" OR ANY OTHER GOVERNING AGENCY SAFETY REQUIREMENTS.
11. CONTRACTOR FURTHER AGREES THAT HE SHALL ASSUME SOLE AND COMPLETE RESPONSIBILITIES FOR JOB SITE CONDITIONS DURING THE COURSE OF CONSTRUCTION OF THIS PROJECT, INCLUDING SAFETY OF ALL PERSONS AND PROPERTY, THAT HIS RESPONSIBILITY SHALL APPLY CONTINUOUSLY AND NOT BE LIMITED TO NORMAL WORKING HOURS AND THAT THE CONTRACTOR SHALL DEFEND, INDEMNIFY, AND HOLD THE OWNER THE ARCHITECT, AND THE ARCHITECTS CONSULTANTS HARMLESS FROM ANY AND ALL LIABILITY, REAL OR ALLEGED IN CONNECTION WITH THE PERFORMANCE OF WORK ON THIS PROJECT EXCEPTING FOR LIABILITY ARISING FROM SOLE NEGLIGENCE OF THE OWNER OR ARCHITECT.
12. SITE ACCESSIBILITY REQUIREMENTS (CBC CHAPTER 11-B) WILL BE REVIEWED UNDER THE GRADING PLAN CHECK NUMBER.
13. ALL MATERIALS INSTALLED SHALL BE A MINIMUM OF CLASS III. INSULATION, PIPING, WIRING ETC. SHALL HAVE A MINIMUM FLAME SPREAD CLASS PER SECTION 707.
14. ALL HORIZONTAL DIMENSIONS ARE TAKEN FROM FACE OF STUD UNLESS OTHERWISE NOTED.
15. ALL STUDS ARE 2X6 UNLESS NOTED OTHERWISE.
16. PADS AT ROUGH GRADING WILL HAVE A MINIMUM SLOPE OF 1% TOWARDS THE STREET DESIGNED DRAINAGE OUTLET. REFER TO CIVIL DRAWINGS.
17. FINISH GRADING WILL BE COMPLETED AND APPROVED AND SLOPE PLANTING AND IRRIGATION SYSTEMS INSTALLED BEFORE OCCUPANCY OF BUILDINGS.
18. SECURE ENCROACHMENT PERMIT PER THE CITY'S REQUIREMENTS FOR CONSTRUCTION, GRADING AND OR DISCHARGE OF DRAINAGE WITHIN STREET RIGHT OF WAY.
19. SECURITY REQUIREMENTS FOR SWINGING DOORS SHALL COMPLY WITH THE CITY OF LOS ANGELES BUILDING CODE.
20. CONTRACTOR SHALL PROVIDE STEEL CERTIFICATIONS TO THE CITY GOVERNING AGENCY BUILDING DIVISION PRIOR TO INSTALLATION.
21. THE GENERAL CONTRACTOR SHALL FURNISH HYDRAULICALLY CALCULATED AUTOMATIC FIRE SPRINKLER SYSTEMS. CONTRACTOR SHALL PREPARE SHOP DRAWINGS AND OBTAIN APPROVALS FROM THE INSURANCE SERVICE OFFICE, (I.R.I). BUILDINGS, FIRE DEPARTMENT AND OTHER REQUIRED GOVERNING AGENCIES PRIOR TO SUBMITTAL TO THE ARCHITECT FOR HIS REVIEW PRIOR TO ANY INSTALLATION. THE GENERAL CONTRACTOR SHALL BE RESPONSIBLE FOR A COMPLETE SYSTEM FROM CONNECTION TO SITE WATER MAIN TO INTERIOR OF BUILDING. REFER TO SPECIFICATIONS AND TO PLAN INDICATING BUILDINGS TO BE SPRINKLED ALL COSTS ASSOCIATED TO UPGRADE THE FIRE SPRINKLERED SYSTEM SHALL BE PAID BY THE CONTRACTOR. FIRE SPRINKLER DRAWINGS SHALL BE UNDER A DEFERRED SUBMITTAL.
22. THE FIRE SPRINKLER SERVICE MUST BE EQUIPPED AND INSTALLED PER FIRE DEPARTMENT SPECIFICATIONS AND DIRECTIONS. FIRE SPRINKLER CONTRACTOR SHALL CONTACT THE FIRE DEPARTMENT FOR WATER DESIGN SPECS. ON UNDERGROUND CONNECTION.

PROJECT DESCRIPTION

PROJECT ADDRESS: **18958 Daisetta St # 106, Rowland Heights, CA 91748**
TYPE OF CONSTRUCTION: TYPE V-B
1. BUILDING STORIES : 3
2. FIRE SPRINKLER: YES
3. REQUIRED 2 EXIT, PROVIDE 3 EXIT
4. OCCUPANCY TYPE: B

APPLICABLE CODE

2022 CALIFORNIA BUILDING CODE (CBC)
2022 CALIFORNIA MECHANICAL CODE (CMC)
2022 CALIFORNIA PLUMBING CODE (CPC)
2022 CALIFORNIA ELECTRICAL CODE (CEC)
2022 CALIFORNIA FIRE CODE (CFC)
2022 CALIFORNIA BUILDING ENERGY EFFICIENCY STANDARDS
2022 CALIFORNIA GREEN BUILDING STANDARDS CODE

PAGE INDEX

T-0 TITLE SHEET
T-1 SITE PLAN
A-0 FINISH & DOOR SCHEDULE
A-1 EX FLOOR PLAN
A-2 PROPOSED FLOOR PLAN
P-1 HOT & COLD WATER PLAN
P-2 WASTE WATER PLAN

SCOPE OF WORK

EXISTING RESTAURANT INTERIOR TENANT IMPROVEMENT
- CHANGE KITCHEN EQUIPMENT

SEPARATE PERMIT

1. SIGN PROGRAM IS UNDER A SEPARATE SUBMITTAL BY BUILDING DEPT.

VICINITY MAP

CONTACT INFO

8 Corporate Park #100
Irvine, CA 92606
310-634-9065
Athlitdesignservice@gmail.com

OCCUPANCY LOAD CACULATION

SECTION	AREA	OCCUPANCY LOAD
DINNING AREA	768 sq. ft.	O.L = 768/15=51
VIP ROOM	441 sq. ft.	O.L = 441/15=29
CASHIER /SERVICE AREA	282 sq. ft.	O.L = 282/100=3
KITCHEN /PREP AREA	565 sq. ft.	O.L = 565/200=3
RESTROOM AREA	235 sq. ft.	
HALL WAY	235 sq. ft.	
TOTAL	2617 sq. ft.	86

FIRE DEPARTMENT NOTES

1. EXIT DOORS SHALL SWING IN THE DIRECTION OF EXIT TRAVEL WHEN SERVING ANY HAZARDOUS AREA OR WHEN SERVING AN OCCUPANT LOAD OF 50 OR MORE.
2. EXIT DOOR SHALL BE OPERABLE FROM THE INSIDE WITHOUT USE OF A KEY OR ANY SPECIAL KNOWLEDGE OR EFFORT.
3. WIDTH AND HEIGHT OF REQUIRED EXIT DOORWAYS TO COMPLY WITH CBC2019 SECTION 1005
4. EXITS SHALL BE ILLUMINATED AT ANY TIME THE BUILDING IS OCCUPIED, WITH LIGHT HAVING AN INTENSITY OF NOT LESS THAN ONE FOOT-CANDLE AT FLOOR LEVEL.
5. EXIT SIGN SHALL BE PER CBC 2019
6. FIRE EXTINGUISHER REQUIREMENTS SHALL BE DETERMINED BY FIRE INSPECTOR.
7. BUILDING ADDRESS NUMBERS TO BE PROVIDED ON THE FRONT OF ALL BUILDINGS AND SHALL BE VISIBLE AND LEGIBLE FROM STREET FRONTING THE PROPERTY. SAID NUMBERS SHALL CONTRAST WITH THEIR BACKGROUND.
8. COMMERCIAL DUMPSTER OR CONTAINERS WITH AN INDIVIDUAL CAPACITY ON 1.5 CUBIC YARDS OR GREATER SHALL NOT BE STORED OR PLACED WITHIN FIVE FEET OF COMBUSTIBLE WALLS, OPENINGS OR COMBUSTIBLE ROOF EAVE LINES UNLESS AREAS CONTAINING DUMPSTER ARE PROTECTED BY AN APPROVED SPRINKLER SYSTEM.
9. AN APPROVAL FIXED FIRE EXTINGUISHES SYSTEM FOR THE KITCHEN HOOD, DUCTS AND COOKING SURFACES SHALL BE HANDLED BY THE LICENSED FIRE PROTECTION CO. TO BE SUBMITTED TO THE FIRE DEPT. FOR REVIEW & APPROVAL PRIOR TO INSTALLATION.
10. THE LICENSED FIRE PROTECTION CO. IS RESPONSIBLE FOR THE U.L. APPROVAL SYSTEM NUMBER, THE SUBMISSION U.L. APPROVAL SCHEMATIC DRAWING TO AREA INSPECTION UNIT.
11. INTERIOR FINISH SHALL BE PROVIDED IN ACCORDANCE WITH CBC2019 TABLE 803.5
12. ALL DRAPES, HANGINGS, CURTAINS, DROPS AND ALL OTHER DECORATIVE MATERIALS SHALL COMPLY WITH FIRE CODE CHAPTER 11
13. BUILDING ADDRESS NUMBERS SHALL BE PROVIDED AND MAINTAINED SO AS TO BE PLAINLY VISIBLE AND LEGIBLE FROM THE STREET FRONTING THE PROPERTY. THE NUMBERS SHALL BE A MINIMUM 4 INCHES HIGH, 1 INCH WIDE WITH A 1/2 INCH STROKE. FOR BUILDINGS SET BACK MORE THAN 150 FEET FROM THE STREET, THE NUMBERS SHALL BE A MINIMUM 5 INCHES HIGH, 2 INCHES WIDE WITH A 1/2 INCH STROKE. CFC 505.1
14. THE INSPECTION, HYDROSTATIC TEST AND FLUSHING OF THE UNDERGROUND FIRE PROTECTION PIPING SHALL BE WITNESSED BY AN AUTHORIZED FIRE DEPARTMENT REPRESENTATIVE AND NO UNDERGROUND PIPING OR THRUST BLOCKS SHALL BE COVERED WITH EARTH OR HIDDEN FROM VIEW UNTIL THE FIRE DEPARTMENT REPRESENTATIVE HAS BEEN NOTIFIED AND GIVEN NOT LESS THAN 48 HOURS IN WHICH TO INSPECT SUCH INSTALLATIONS. FIRE CODE.

CONTRACTOR NOTES

1.BEFORE SUBMITTING THE BID, THE CONTRACTOR SHALL CAREFULLY EXAMINE THE PLANS PERTAINING TO THIS WORK, CONTRACTOR SHALL VISIT THE SITE AND FULLY INFORM HIMSELF AS TO ALL CONDITIONS AND LIMITATIONS APPLYING TO THIS WORK HE SHALL ESTIMATE AND INCLUDE IN HIS BID A SUM SUFFICIENT TO COVER THE COST OF ALL LABOR AND MATERIALS TO ACCOMPLISH THE INTENT OF THESE PLANS.
2. THE CONTRACTOR SHALL OBTAIN PERMIT'S AS REQUIRED BY THE Governing AUTHORITIES FOR CONSTRUCTION.
3. ELECTRICAL, MECHANICAL AND PLUMBING SYSTEMS SHALL BE DONE BY THE CONTRACTOR.
4. THE CONTRACTOR SHALL PROCURE IN THE OWNER'S NAME, AND CHARGES FOR INSTALLATION OF THE WATER AND GAS METERS AND ALL PIPING FROM MAIN TO SAID METERS.
5. THE CONTRACTOR SHALL SENT PROPER NOTICES. MAKE ALL NECESSARY ARRANGEMENTS AND PERFORM ALL SERVICES REQUIRED IN THE MAINTENANCE OF ALL PUBLIC UTILITIES
6. THE CONTRACTOR SHALL REQUIRE SUCH COOPERATION OF THE VARIOUS TRADES AS WILL BE NECESSARY TO COMPLETE EACH AND EVERY PART OF THE WORK. EVEN
THROUGHOUT SPECIFICALLY INDICATED. NOTED OR DETAILED ON THE DRAWINGS
OR SPECIFICATIONS.
7. DIMENSIONS AND CONDITIONS AT THE JOBSITE SHALL BE VERIFIED BY(THE CONTRACTORS. DISCREPANCIES IN THE DRAWINGS OR BETWEEN THE DRAWINGS AND ACTUAL FIELD CONDITIONS OR CODE REQUIREMENTS SHALL BE REPORTED TO THE ARCHITECT. CORRECTED DRAWINGS OR INSTRUCTIONS SHALL BE ISSUED By THE ARCHITECT PRIOR TO THE INSTALLATION OF ANY WORK

ATHLIT DESIGN

8 Corporate Park #100
Irvine, CA 92606
310-634-9065
Athlitdesignservice@gmail.com

This drawing, its idea, design, and concept is the property of HERA design group. It is not to be reproduced, copied or loaned in part of whole, without written permission obtain the quthority please contact us @ (t)3106349065

LICENSED ARCHITECT
YUBIN XIE
C-40260
REN.01/31/25
STATE OF CALIFORNIA

PROJECT TITLE / ADDRESS
Late Night Bar
18958 Daisetta St # 106,
Rowland Heights, CA 91748

DRAWING TITLE
TITLE SHEET

REVISIONS	
DATE	NO. △

DATE:
DRAWN BY: S.C.
SCALE: AS NOTED
SHEET NO.
T-0

Trash Enclosure

Late Night Bar

18958 Daisetta St # 106,
Rowland Heights, CA 91748

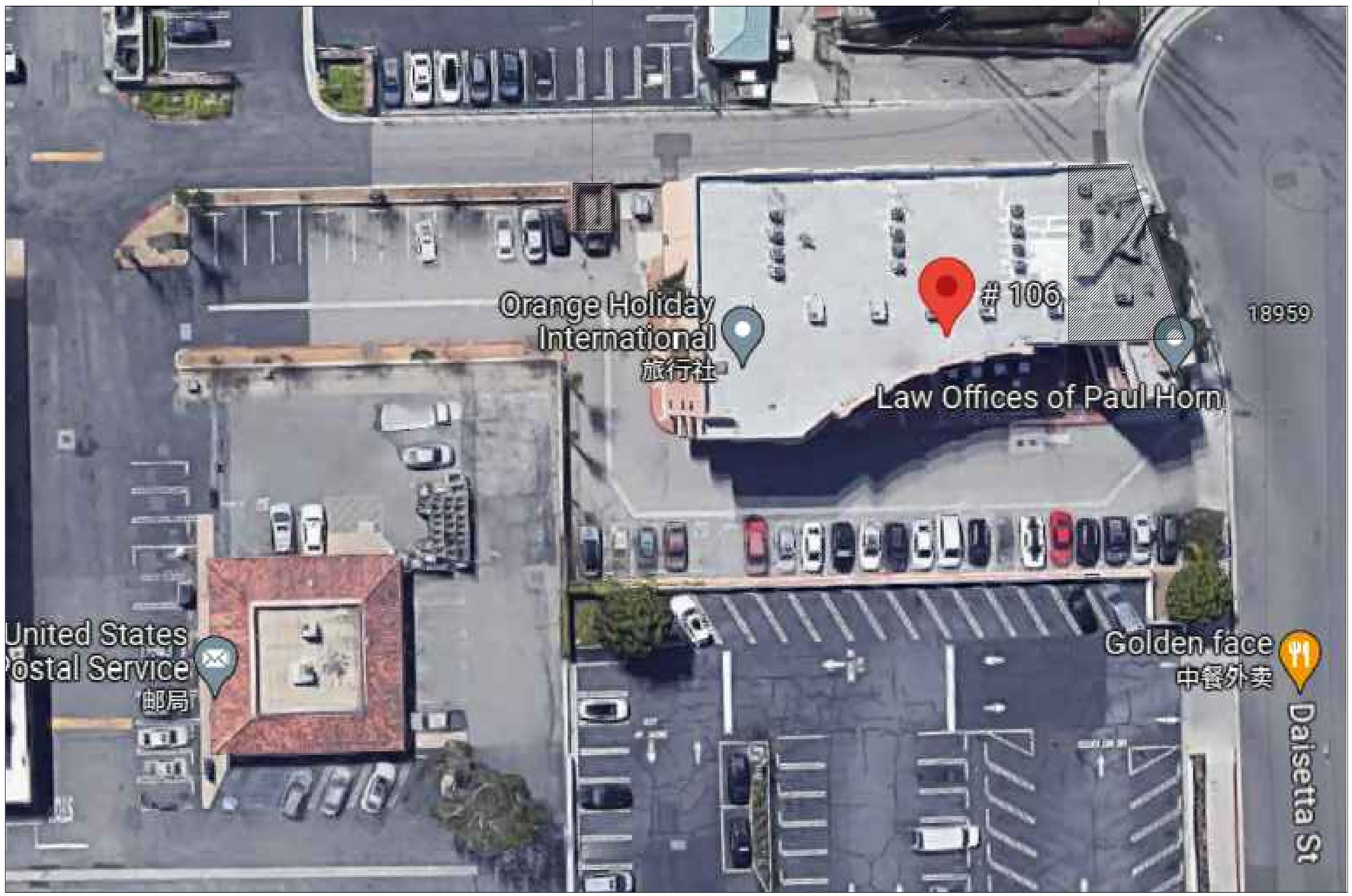

EX SITE PLAN

N.T.S

outside trash dumpster enclosure. The interior walls and floor of the trashdumpster enclosure must be smooth and sealed with an epoxy sealer.

ATHLIT DESIGN

8 Corporate Park #100
Irvine, CA 92606
310-634-9065
Athlitdesignservice@gmail.con

This drawing, its idea, design, and concept is the property of HERA design group. It is not to be reproduced, copied or loaned in part of whole, without written permission obtain the quthority please contact us @ (t)3106349065

LICENSED ARCHITECT
YUBIN XIE
C-40260
REN.01/31/25
STATE OF CALIFORNIA

PROJECT TITLE / ADDRESS

Late Night Bar
18958 Daisetta St # 106,
Rowland Heights, CA 91748

DRAWING TITLE

EX SITE PLAN

REVISIONS	
DATE	NO. △

DATE:

DRAWN BY: S.C.

SCALE: AS NOTED

SHEET NO.

T-1

DOORS SCHEDULE

SCALE N.T.S (3)

DR. TYPE/SIZE	DESCRIPTION	FRAME		REMARKS	SYMOBLE	
A) 36"X6'-8"	ALUM/TEMP. GLASS	GLASS	A	32" CLR. DR.,SELF-CLOSING.	D1 EX	3pr. hinges, push/pull, self-closer, alum, threshold. Note: sign remain unlocked during business hours Have a deadbolt with a minimum 1bolt projection
B) 36"X6'-8"	WOOD, PAINT	HM/KD	B	32" CLR. DR., SELF-CLOSING.	D2 EX	door with installed panic hardware to swing into the direction of egress travel NOTE:List brand,model, and series of door hardware in accordance with "Approved Products List1/17"
C) 36"X6'-8"	WOOD, PAINT	HM/KD	B	32" CLR. DR., SELF-CLOSING.	D3 EX	door with installed panic hardware to swing into the direction of egress travel NOTE:List brand,model, and series of door hardware in accordance with "Approved Products List1/17"
D) 36"X6'-8"	METAL FIRE-RATED 20 MIN.	STEEL	C	32" CLR. EA. DR.,W/P PANIC HWDR.(PUSH TYPE)SELF-CLOSING.	D4 EX	3pr. hinges,push /pull, self-closer, alum, threshold Note 1: sign remain unlocked during business hours NOTE:List brand,model, and series of door hardware in accordance with "Approved Products List1/17"

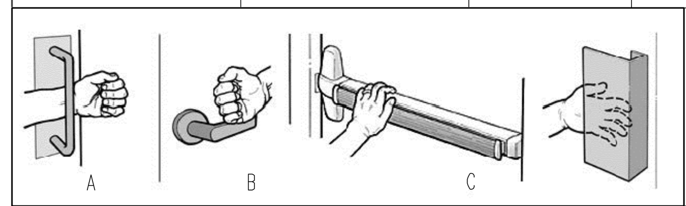

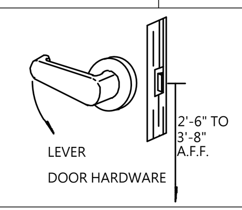

DOOR PANIC HARDWARE NOTE: 2 PIECE VERTICAL RODS RON DUPRIN, JACKSON OR EQUAL, PUSH BAR MUST BE OFFSET FROM DRS EDGE.

EGRESS DOORS SHALL BE READILY OPENABLE FROM THE EGRESS SIDE WITHOUT THE USE OF A KEY OR ANY SPECIAL KNOWLEDGE OR EFFORT.

OPERABLE PARTS SHALL BE OPERABLE WITH ONE HAND AND SHALL NOT REQUIRE TIGHT GRASPING, PINCHING, OR TWISTING OF THE WRIST. FORCE REQUIRED TO ACTIVATE OPERABLE PARTS SHALL BE 5 POUNDS MAXIMUM. CBC 11B-309.4.

DOOR PANIC HARDWARE NOTE: 2 PIECE VERTICAL RODS RON DUPRIN, JACKSON OR EQUAL, PUSH BAR MUST BE OFFSET FROM DRS EDGE.

D1 EXISTING — 10" MIN. BOTTOM RAIL OR PROVIDE KICK PLATE RUBBER BUMPER ON CHAIR TILES 1/4" MAX. BELOW THRESHOLD

1010.1.9.4 BOLT LOCKS. MANUALLY OPERATED FLUSH BOLTS OR SURFACE BOLTS ARE NOT PERMITTED.

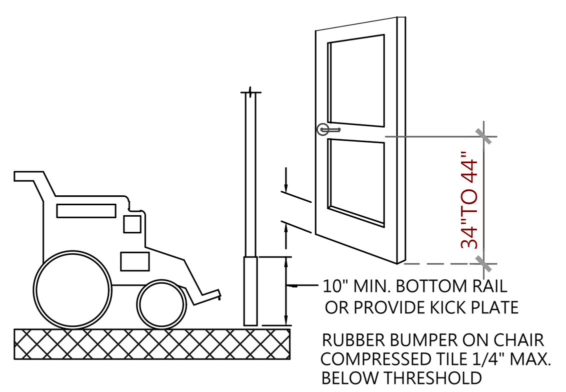

1010.1.3 DOOR OPENING FORCE. THE FORCE FOR PUSHING OR PULLING OPEN INTERIOR SWINGING EGRESS DOORS, OTHER THAN FIRE DOORS, SHALL NOT EXCEED 5 POUNDS (22 N). THESE FORCES DO NOT APPLY TO THE FORCE REQUIRED TO RETRACT LATCH BOLTS OR DIS-ENGAGE OTHER DEVICES THAT HOLD THE DOOR IN A CLOSED POSI-TION. FOR OTHER SWINGING DOORS, AS WELL AS SLIDING AND FOLDING DOORS, THE DOOR LATCH SHALL RELEASE WHEN SUBJECTED TO A 15-POUND (67 N) FORCE. THE DOOR SHALL BE SET IN MOTION WHEN SUBJECTED TO A 30-POUND (133 N) FORCE. THE DOOR SHALL SWING TO A FULL-OPEN POSITION WHEN SUBJECTED TO A 15-POUND (67 N) FORCE.

1010.1.9.1 HARDWARE. DOOR HANDLES, PULLS, LATCHES, LOCKS AND OTHER OPERATING DEVICES ON DOORS REQUIRED TO BE ACCES-SIBLE BY CHAPTER 11A OR 11B SHALL NOT REQUIRE TIGHT GRASP-ING, TIGHT PINCHING OR TWISTING OF THE WRIST TO OPERATE.
THESE DESIGN REQUIREMENTS FOR DOOR HANDLES, PULLS, LATCHES, LOCKS AND OTHER OPERATING DEVICES, INTENDED FOR USE ON REQUIRED MEANS OF EGRESS DOORS IN OTHER THAN GROUP R AND M OCCUPANCIES WITH AN OCCUPANT LOAD OF 10 OR LESS, SHALL COMPLY WITH SFM STANDARD 12-10-2, SECTION 12-10-202 CONTAINED IN THE CCR, TITLE 24, PART 12, CALIFORNIA REFERENCED STANDARDS CODE.
1010.1.9.2 HARDWARE HEIGHT. DOOR HANDLES, PULLS, LATCHES, LOCKS AND OTHER OPERATING DEVICES SHALL BE INSTALLED 34 INCHES (864 MM) MINIMUM AND 48 INCHES (1219 MM) MAXIMUM ABOVE THE FINISHED FLOOR. LOCKS USED ONLY FOR SECURITY PURPOSES AND NOT USED FOR NORMAL OPERATION ARE PERMITTED AT ANY HEIGHT.

THE EGRESS SIDE ON OR ADJACENT TO THE DOOR STATING: THIS DOOR TO REMAIN UNLOCKED WHEN THIS SPACE IS OCCUPIED. THE SIGN SHALL BE IN LETTERS 1 INCH (25 MM) HIGH ON A CONTRASTING BACK-GROUND.

1010.1.7 THRESHOLDS. THRESHOLDS AT DOORWAYS SHALL NOT EXCEED 3/4 INCH (19.1 MM) IN HEIGHT ABOVE THE FINISHED FLOOR OR LANDING FOR SLIDING DOORS SERVING DWELLING UNITS OR 1/2 INCH (12.7 MM) ABOVE THE FINISHED FLOOR OR LANDING FOR OTHER DOORS. RAISED THRESHOLDS AND FLOOR LEVEL CHANGES GREATER THAN 1/4 INCH (6.4 MM) AT DOORWAYS SHALL BE BEVELED WITH A SLOPE NOT GREATER THAN ONE UNIT VERTICAL IN TWO UNITS HORIZONTAL (50-PERCENT SLOPE).

FLAME SPREAD CLASSIFICATION

SCALE N.T.S (7)

For SI: 1 inch = 25.4 mm, 1 square foot = 0.0929m2. *NP = Not permitted [SFM]*
a. Class C interior finish materials shall be permitted for wainscotting or paneling of not more than 1,000 square feet of applied surface area in the grade lobby where applied directly to a noncombustible base or over furring strips applied to a noncombustible base and flreblocked as required by Section 803.11.1.
b. In exit enclosures of buildings less than three stories above grade plane of other than Group 1-3, Class B interior finish for nonsprinklered buildings and Class C interior finish for sprinklered buildings shall be permitted.
c. Requirements for rooms and enclosed spaces shall be based upon spaces enclosed by partitions. Where a fire-resistance rating is required for structural elements, the enclosing partitions shall extend from the floor to the ceiling. Partitions that do not comply with this shall be considered enclosing spaces and the rooms or spaces on both sides shall be considered one. In determining the applicable requirements for rooms and enclosed spaces, the specific occupancy thereof shall be the governing factor regardless of the group classification of the building or structure.
d. Lobby areas in Group A-l, A-2 and A-3 occupancies shall not be less than Class B materials.
e. Class C interior finish materials shall be permitted in places of assembly with an occupant load of 300 persons or less.
f. For places of religious worship, wood used for ornamental purposes, trusses, paneling or chancel furnishing shall be permitted.
g. Class B material is required where the building exceeds two stories.
h. Class C interior finish materials shall be permitted in administrative spaces. i. Class C interior finish materials shall be permitted in rooms with a capacity of four persons or less.
j. Class B materials shall be permitted as wainscotting extending not more than 48 inches above the finished floor in corridors. k. Finish materials as provided for in other sections of this code.
l. Applies when the exit enclosures, exit passageways, corridors or rooms and enclosed spaces are protected by an automatic sprinkler system installed in accordance with Section 903.3.1.1 or 903.3.1.2.

ALL FINISHES SHALL COMPLY WITH TABLE 803.9, CBC.

. INTERIOR WALL AND CEILING FINISHES SHALL BE CLASSIFIED IN ACCORDANCE WITH BUILDING CODE 803 AND TABLE 803.9

CLASS A: FLAME SPREAD 0-25; SMOKE-DEVELOPED INDEX 0-450. ← USE THIS
CLASS B: FLAME SPREAD 26-75; SMOKE-DEVELOPED INDEX 0-450.
CLASS C: FLAME SPREAD 76-200; SMOKE-DEVELOPED INDEX 0-450.

ROOM FINISH SCHEDULE

SCALE N.T.S (2)

ITEM / ROOM NAME	FLOOR: QUARRY TILE SMOOTH	FLOOR: EPOXY SEAL ON CONC.	FLOOR: SHEET VINYL 1 PC W/BASE	FLOOR: CARPET	FLOOR: CER. TILE	FLOOR: S. STEEL	FLOOR: SEALED CONC. SMOOTH	BASE: 4" OR 6" HIGH VINYL BASE	BASE: 6" CER. TILE W/ 3/8" R. WHITE COLOR COVED	BASE: QUARRY TILE , 6" HT. W/ 3/8" R. COVED	BASE: 6" CER TILE	BASE: 6" HIGH SHEET METAL	BASE: CONTINUE WITH 3/8" RAD.	WALL: DRY WALL (Gypsum Bd.) USE MRGB IN TOILET 4'-0" MIN AFF	WALL: HIGH GLOSS ENAMEL PAINT, LIGHT COLOR	WALL: WASHABLE, SMOOTH	WALL: FLAT PAINT	WALL: RESISTANT WALL 8'-0" HIGH, FRP	WALL: MEATL, GALV. PANEL 8'-0" HIGH,	WALL: RESISTANT WALL 4'-0" HIGH, FRP	CEILING: DRY WALL CEILING	CEILING: HIGH GLOSS ENAMEL PAINT, LIGHT COLOR	CEILING: WASHABLE, SMOOTH	CEILING: "USG"GYPSUM,WHITE VINYL	CEILING: "T" BAR CEILING PANEL SMOOTH	CEILING: OPEN CEILING	CEILING: MEATL, GALV. PANEL
SERVICE AREA	○									○				○	○	○			○		○	○	○				
KITCHEN/PREP AREA	○									○				○	○	○			○		○	○	○				
RESTROOM					○				○					○	○	○				○	○	○	○				
DINING AREA							○				○						○									○	
STORAGE	○									○			○	○	○						○	○	○				
MOP SINK AREA	○									○				○	○	○			○		○	○	○				

REMARK

FINISH SCHEDULE NOTES:

1) Wall and ceilings in all areas except dining area shall be durable,Smooth, and nonabsorbent, with a light colored (light colored isdefined as having a light reflectance value of 70%or greater.), easily cleanable, washable finish.
2) All counter surface including underside to be durable, smooth,nonabsorbent easily cleanable and washable finish (may requirestainless stee or NSF approval high pressure laminate).
3) Flooring under equipment and at the base coves shall be completely smooth. floor surfaces which contain slip resistant agents shall be restricted to traffic areas only.
4) All equipment shall be either easily movable (ie., on casters),min. 6 inch rounded metal legs, or sealed to min. 2 inch solidmasonry island with min. three-eighths inch coved radius.
5) Floor Smooth Conc. must be Top-set type ceramic coved base.
6) Water resistant walls (Le., FRP, stainless steel, ceramic tile ",)are reQuired behind all sinks and dishwashers. material to be min. 8 ft. high for CITY,
7) A min. 20-foot candles of light measured 30" A.F.F. in kitchen,utensil washing area, service area, though out facility for duringgeneral cleaning up activity.
8) A min. 10-foot candles of light measured 30" A.F.F. in restroomand storage rooms.

MATERIALS NOTES:

CEILING PANEL -- The following ceiling panels are approved.
Armstrong #870 Mina Board ML (Mtl laminaté non-perforated)
Armstrong #1721 or #884 Mylar Fire Guard (non-perforated)
Domtar Gypsum #3270 White Vinyl facing panel
U.S. Gypsum #3270 Vinyl Rock
U.S. Gypsum #56091 Envirogard with clean room facing

FLOOR COVERING -- The following are approved.
Tiles -- American Olean; Dal Tiles
Topset Ceramic Coved Base -- B&W Tile Co. #S-3619T; OTW Inc. #S-3619T
Sheet vinyl -- Armstrong "Classic Corlon" (86000 Series);
Armstrong "Custom Corlon" (86000 Series);
Tarket "Expression Optima" (05800 Series)
Concrete Sealer -- Ameritone #7101, Aque Mix Choice 15

ALL FINISHES SHALL COMPLY WITH TABLE 803.5, CBC.
TO SUBMIT SHOP DRAWINGS AND FOAM PANEL SPECS OF WALK IN COOLER AND FREEZER TO BUILDING DEPARTMENT FOR APPROVAL PRIOR TO INSTALLATION.

QUARRY TILE DETAIL

SCALE N.T.S (3)

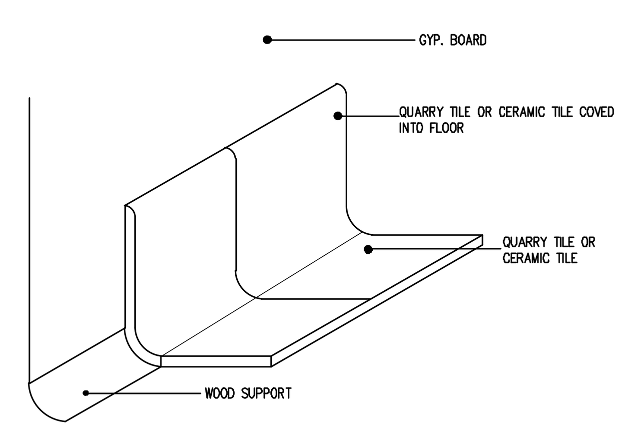

GROOVED BORDER DETAIL

SCALE N.T.S (5)

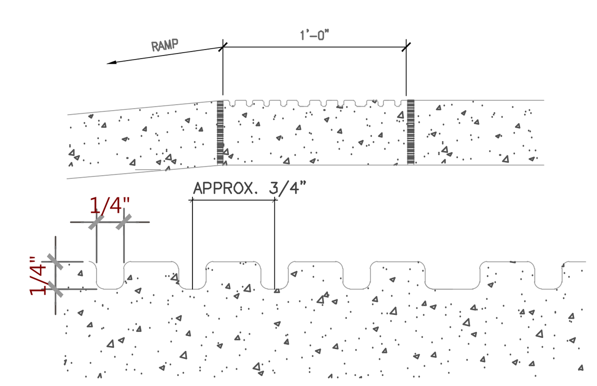

TRUNCATED DEMES DETAIL

SCALE N.T.S (4)

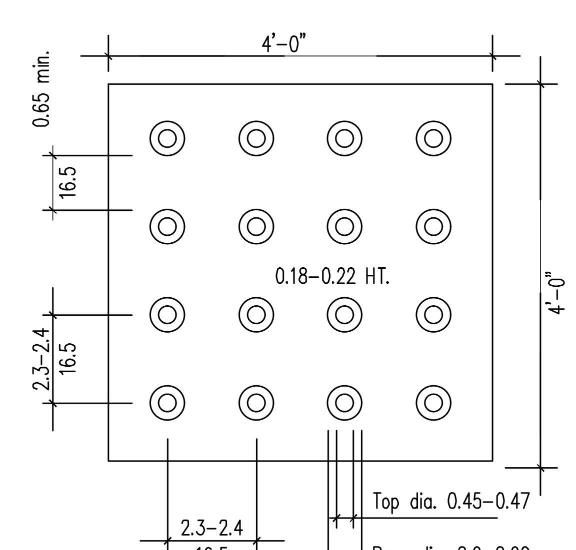

FRONT APPROACH

SCALE N.T.S (6)

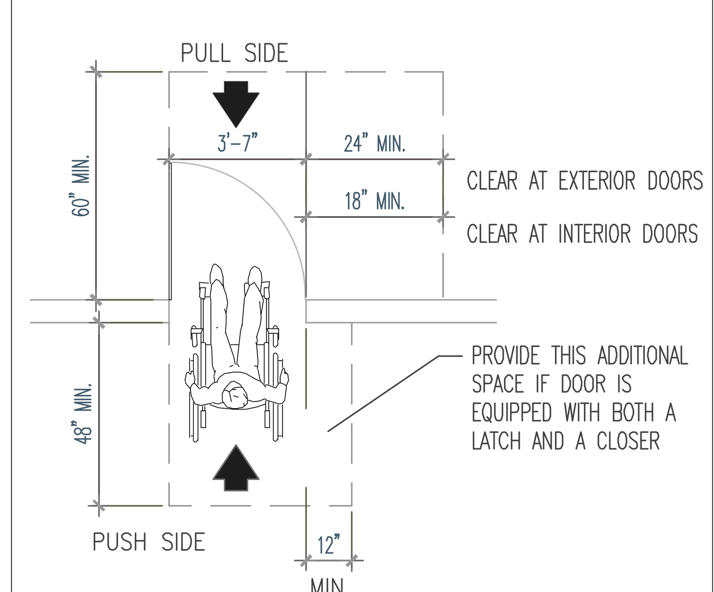

ATHLIT DESIGN
8 Corporate Park #100
Irvine, CA 92606
310-634-9065
Athlitdesignservice@gmail.com

This drawing, its idea, design, and concept is the property of HERA design group. It is not to be reproduced, copied or loaned in part of whole, without written permission obtain the quthority please contact us @ (t)3106349065

LICENSED ARCHITECT
YUBIN XIE
C-40260
REN.01/31/25
STATE OF CALIFORNIA

PROJECT TITLE / ADDRESS
Late Night Bar
18958 Daisetta St # 106,
Rowland Heights, CA 91748

DRAWING TITLE
FINISH SCH.

REVISIONS	
DATE	NO. △

DATE:
DRAWN BY: S.C.
SCALE: AS NOTED
SHEET NO.
A-0

LEGEND:

SCALE N.T.S (1)

- ALL ARE EXISTING WALL, NO CHANGE.
- EXIT SIGN PROVIDE ILLUMINATED "EXIT" SIGN BACK-UP POWER 90 MIN.
- FLOOR SINK
- FLOOR DRAIN
- CLASS K PORTABLE FIRE EXTINGUISHER REQUIRED WITHIN 30 FEET OF THE COOKING EQUIPMENT
- TACTILE EXIT SIGN
- H.C SIGN
- ### SEE "A-0" EQUIPMENT SCHEDULE

COUNTER SECTION DETAIL

SCALE N.T.S (2)

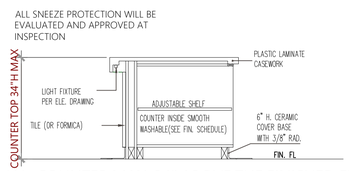

ALL COUNTER MAX. 34" ABOVE THE FINISHED FLOOR

WATER HEATER DETAIL

SCALE N.T.S (3)

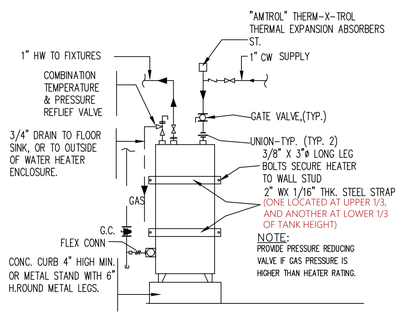

OCCUPANCY LOAD CACULATION

SCALE N.T.S (4)

SECTION	AREA	OCCUPANCY LOAD
DINNING AREA	768 sq. ft.	O.L = 768/15=51
VIP ROOM	441 sq. ft.	O.L = 441/15=29
CASHIER /SERVICE AREA	282 sq. ft.	O.L = 282/100=3
KITCHEN /PREP AREA	565 sq. ft.	O.L = 565/200=3
RESTROOM AREA	235 sq. ft.	
HALL WAY	235 sq. ft.	
TOTAL	2617 sq. ft.	86

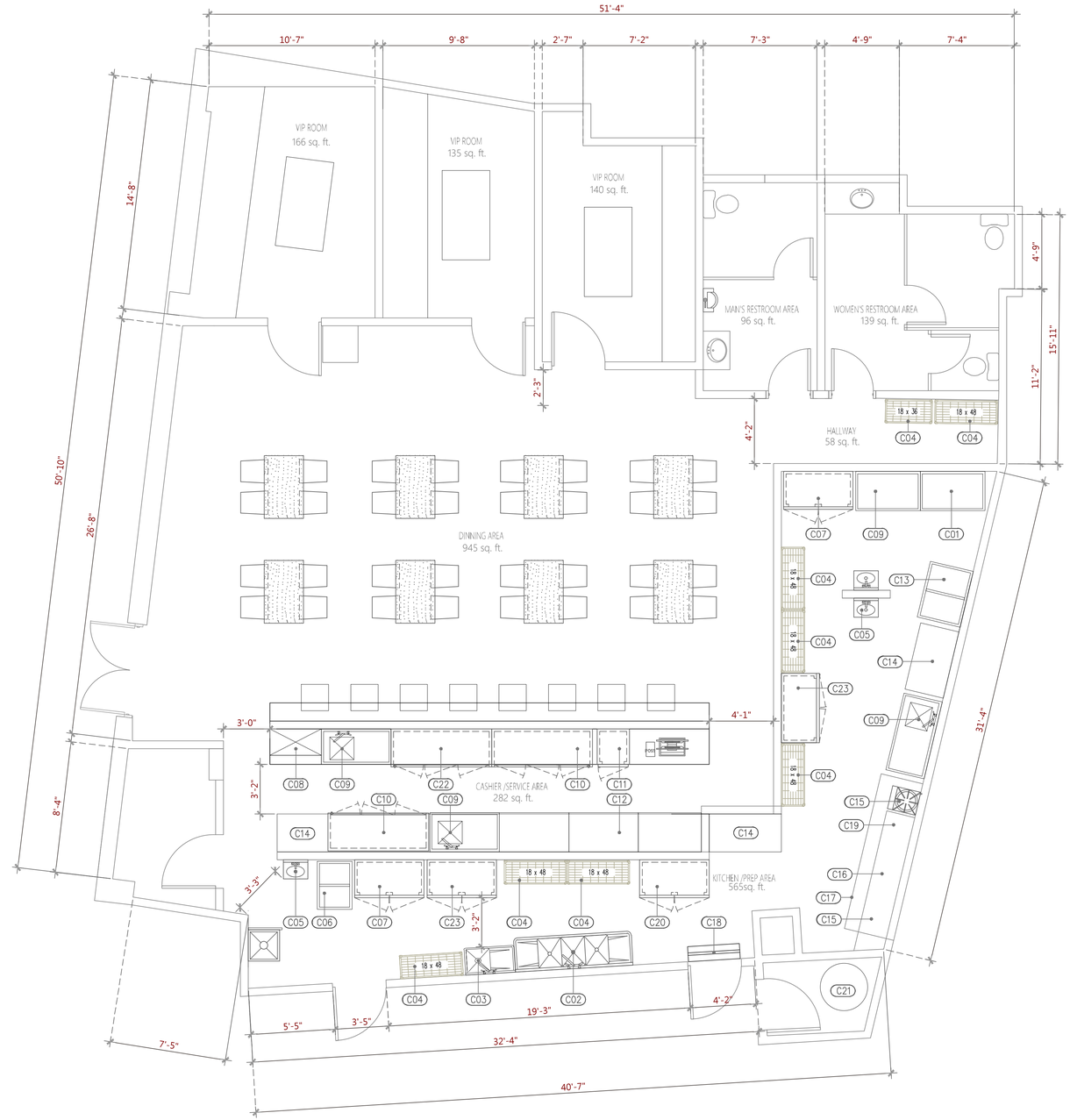

EXISTING FLOOR PLAN A

SCALE: 1/4"=1'-0"

ALL EQUIPMENT NO CHANGER JUST CHANGED TENANT

ATHLIT DESIGN

8 Corporate Park #100
Irvine, CA 92606
310-634-9065
Athlitdesignservice@gmail.com

This drawing, its idea, design, and concept is the property of HERA design group. It is not to be reproduced, copied or loaned in part of whole, without written permission obtain the quthority please contact us @ (t)3106349065

LICENSED ARCHITECT
YUBIN XIE
C-40260
REN.01/31/25
STATE OF CALIFORNIA

PROJECT TITLE / ADDRESS

Late Night Bar
18958 Daisetta St # 106,
Rowland Heights, CA 91748

DRAWING TITLE

EX FLOOR PLAN

REVISIONS	
DATE	NO.

DATE:

DRAWN BY: S.C.

SCALE: AS NOTED

SHEET NO.

A-1

ALL ARE EXISTING WALL, NO CHANGE.

EXIT SIGN PROVIDE ILLUMINATED "EXIT" SIGN BACK-UP POWER 90 MIN.

FLOOR SINK

FLOOR DRAIN

CLASS K PORTABLE FIRE EXTINGUISHER REQUIRED WITHIN 30 FEET OF THE COOKING EQUIPMENT

TACTILE EXIT SIGN

H.C SIGN

SEE "A-0" EQUIPMENT SCHEDULE

COUNTER SECTION DETAIL

SCALE N.T.S (2)

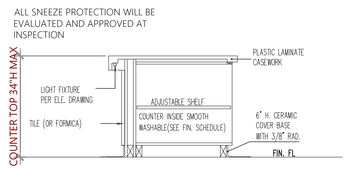

ALL COUNTER MAX. 34" ABOVE THE FINISHED FLOOR

WATER HEATER DETAIL

SCALE N.T.S (3)

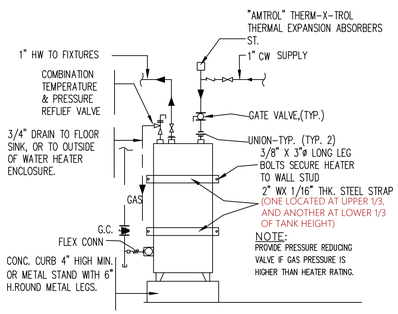

EX COUNTER SECTION DETAIL

SCALE 1/2" =1'-0" (4)

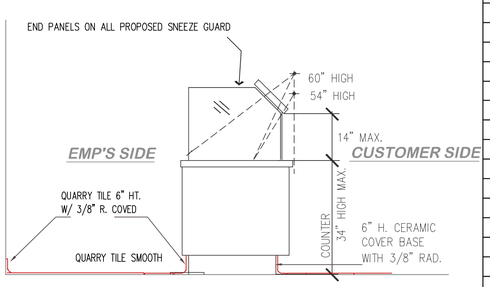

OCCUPANCY LOAD CACULATION

SCALE N.T.S (5)

SECTION	AREA	OCCUPANCY LOAD
DINNING AREA	768 sq. ft.	O.L = 768/15=51
VIP ROOM	441 sq. ft.	O.L = 441/15=29
CASHIER /SERVICE AREA	282 sq. ft.	O.L = 282/100=3
KITCHEN /PREP AREA	565 sq. ft.	O.L = 565/200=3
RESTROOM AREA	235 sq. ft.	
HALL WAY	235 sq. ft.	
TOTAL	2617 sq. ft.	86

COUNTER CLEARANCES

SCALE N.T.S (6)

A PORTION OF THE COUNTER SURFACE THAT IS 36 INCHES LONG MINIMUM AND 34 INCHES HIGH MAXIMUM ABOVE THE FINISH FLOOR SHALL BE PROVIDED. A CLEAR FLOOR OR GROUND
118-904.4.2 FORWARD APPROACH. A PORTION OF THE COUNTER SURFACE THAT
IS 36 INCHES LONG MINIMUM AND 34 INCHES HIGH MAXIMUM SHALL BE PROVIDED. KNEE AND TOE SPACE
COMPLYING WITH 118-306 (KNEE AND TOE CLEARANCE) SHALL BE PROVIDED UNDER THE COUNTER. A CLEAR FLOOR OR GROUND SPACE COMPLYING WITH 118-305 (CLEAR FLOOR OR GROUND SPACE) SHALL BE POSITIONED FOR A FORWARD APPROACH TO THE COUNTER.
EXCEPTION: WHERE THE PROVIDED COUNTER SURFACE IS LESS THAN 36 INCHES LONG, THE ENTIRE COUNTER SURFACE SHALL BE 34 INCHES HIGH MAXIMUM ABOVE THE FINISH FLOOR. C8C 2016 118-904.1

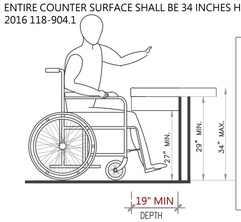

Interior surfaces of toilet room floors of rest rooms required to be made accessible to persons with disabilities shall comply with CBC Sec. 11B-302.
Comply with the current disabled access regulations per CCR T-24 and the 2016 CBC Chapter IIB. The following list represents ONL Y SOME ofthe items necessary to be considered to achieve full compliance. It is incumbent upon the responsible designer to perform a thorough analysis to determine all requirements necessary to achieve compliance with the law for this project

COUNTER CLEARANCES (4)

1. COUNTERS DETAILED ON PLANS INCLUDING BUT NOT LIMITED TO: RECEPTION COUNTERS, INFORMATIONAL COUNTERS, REGISTRATION COUNTERS, SALES AND SERVICE COUNTERS, BREAK ROOM COUNTERS, AND SIMILAR COUNTERS THAT MAY OR MAY NOT HAVE CASH REGISTERS PROVIDED BUT AT WHICH ARE PROVIDED FOR TRANSACTIONS, SALES OR DISTRIBUTION OF GOODS OR SERVICES TO THE PUBLIC DETAILED ON PLANS WITH A PORTION OF THE MAIN COUNTER WHICH IS MINIMUM 36 INCHES WIDE AND A MAXIMUM HEIGHT OF 34 INCHES ABOVE FLOOR LOCATED ON AN ACCESSIBLE ROUTE. CBC 11B-201, 11B-217, 11B-902, 11B-904

4. NOTE THAT THE DOORWAYS LEADING TO SANITARY FACILITIES SHALL BE IDENTIFIED, PER SECTION 2019 CBC CHAP-11B SEC 11B-703.7.2.6 AS FOLLOWS:
a) AN EQUILATERAL TRIANGLE 1/4" THICK WITH EDGES 12" LONG AND A VORTEX POINTING UPWARD AT MEN'S REST ROOMS.
b) A CIRCLE 1/4" THICK, 12" IN DIAMETER AT WOMEN'S REST ROOMS.
c) A 12" DIAMETER CIRCLE WITH A TRIANGLE SUPERIMPOSED ON THE CIRCLE AND WITHIN THE 12" DIAMETER AT UNISEX REST ROOMS.
d) THE REQUIRED SYMBOLS SHALL BE CENTERED ON THE DOOR AT A HEIGHT OF 60".
e) BRAILLE SIGNAGE SHALL ALSO BE LOCATED ON THE WALL ADJACENT TO THE LATCH OUTSIDE OF THE DOORWAYS LEADING TO THE SANITARY FACILITIES, PER SECTION 11B-703.3

EQUIPMENT SCHEDULE

SCALE N.T.S (8)

NEW	EX	QTY	DESCRIPTION	MODEL	MARK
ALL EQUIPMENT SHALL BE NSF APPROVED, REFRIGERATOR SHALL BE MEET					
	EX	C01	Work Table	EAGLE	Stainless Steel
	EX	C02	3-Compartment Sink	Allstrong	Stainless Steel
	EX	C03	Dishwasher	CMA	187065
	EX	C04	Wire Shelves	EAGLE	1848R
	EX	C05	Hand Sink	Allstrong	S1B1310-D-C
	EX	C06	Display Freezer	ULTRA	GF-10L
	EX	C07	2 Door Refrigerator	TRUE	TUC-60-32
	EX	C08	Commercial Ice Maker	COOLER DEPOT	SK-289S
	EX	C09	Dump Sink		
	EX	C10	Beer Dispenser	TRUE	TDD-4
	EX	C11	1 Glass Door Cooler	Coca Cola/Imbera	VR06-C02
	EX	C12	Table Storage		
	EX	C13	Sliding Door Refrigerator	Metalfrio	MSC-41C
	EX	C14	Long Work Table	EAGLE	Stainless Steel
	EX	C15	Gas Burner	CookRite	ATSP-18-1
	EX	C16	Floor Fryer	Pitco Frialator	VF35-S
	EX	C17	Hood	Morales Hood	Stainless Steel
	EX	C18	Air Doors	MARS	N36-1UA-BG
	EX	C19	Equipment Stands	GSW	ES-P3012
	EX	C20	Reach in 2 Door Freezer	COOLER DEPOT	XB54F-HC
	EX	C21	Water Heater	American	BCG3100T1996NOX
	EX	C22	Solid Door Refrigerator	TRUE	TUC-72
	EX	C23	two Door Refrigerator	TRUE	T-49F-HC
	EX	C24	MOP SINK w/MOP HANGER& SHELF	Advance Tabco	9-OP-20 Shown

ALL EQUIPMENT, INCLUDING SHELVING, MUST BE SUPPORTED BY SIX(6) INCH HIGH, EASILY CLEANABLE LEGS, COMMERCIAL CASTORS, OR COMPLETELY SEALED IN POSITION ON A FOUR(4) INCH HIGH CONTINUOUSLY COVED BASE OR CONCRETE CURB TO FACILITATE EASE OF CLEANING.

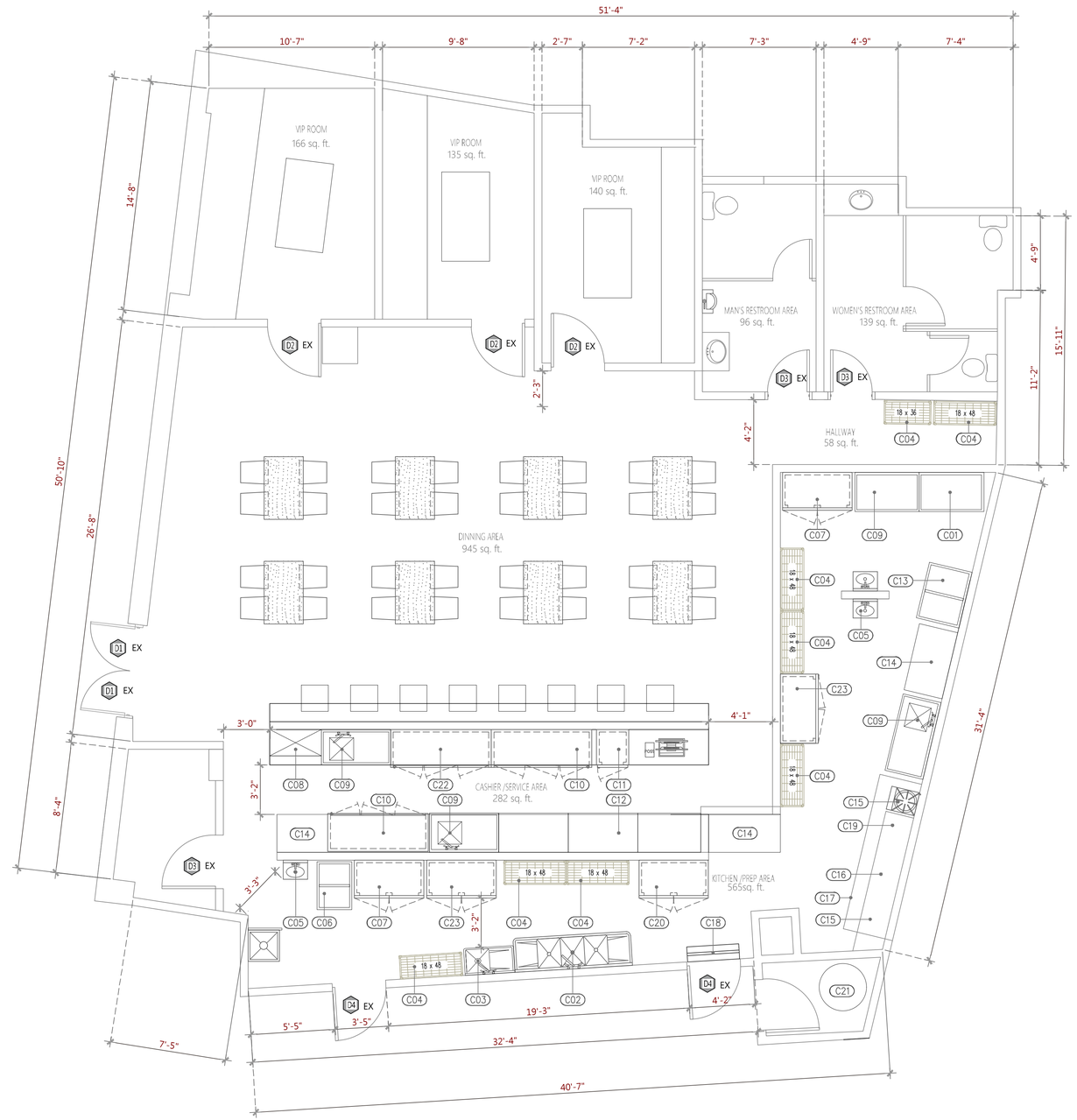

PROPOSED FLOOR PLAN (A)

SCALE: 1/4"=1'-0"
ALL EQUIPMENT NO CHANGER JUST CHANGED TENANT

ATHLIT DESIGN

8 Corporate Park #100
Irvine, CA 92606
310-634-9065
Athlitdesignservice@gmail.com

This drawing, its idea, design, and concept is the property of HERA design group. It is not to be reproduced, copied or loaned in part of whole, without written permission obtain the quthority please contact us @ (t)3106349065

LICENSED ARCHITECT
YUBIN XIE
C-40260
REN.01/31/25
STATE OF CALIFORNIA

PROJECT TITLE / ADDRESS

Late Night Bar
18958 Daisetta St # 106,
Rowland Heights, CA 91748

DRAWING TITLE

PROPOSED FLOOR PLAN

REVISIONS	
DATE	NO.

DATE:

DRAWN BY: S.C.

SCALE: AS NOTED

SHEET NO.

A-2

FIXTURE SCHEDULE

SCALE N.T.S — 1

(REPELLENCE ONLY)

ITEM	FIXTURE	ROUGH-IN SERVICES: COLD WATER	HOT WATER	WASTE	VENT	TRAP	INDIRECT WASTE/ STORM DRAIN	DESCRIPTION
EX WC 1	WATER CLOSET	1/2"		4"	2"			A/S no. 2168.100 "CADET", floor mtd., flush tank, siphon jet, elongated bowl, (1.28 gff), (18"high), complete with disonite no. 95cc-ss self-sustaining check hinge seat, t &s no. B-1305 loose key stop with rigid supply, chrome plated nipple and a/s bolt caps. (order handle on access side per o.d.a. requirements).
EX LAV 1	LAV	1/2"	1/2"	2"	2"	1 1/2"		A/S no. 0355.012 "Lucerne", 20"x18", wall hung. Complete with symmons no. s-20-2g-gp-lp single lever .5 gpm faucet with grid drain, chicago 1005 or t & s no. b-1326 loose key stops with rigid supplies with Chicago no. 49-006 nipple and jr. smith no. 723 carrier with steel plate.
EX WH 1	WATER HEATER							RHEEM RHG PRO 50-75
EX HS 1	HAND SINK	1/2"	1/2"	2"	1 1/2"	2"		A/S "FLAT RIM SINK" 7020.207 END OUTLET. FLAT RIM. SINGLE BOWL,COUNTERTOP SINK, ACID RESISTING SNAMELED CAST IRON. DIMENSION:18"X12"X5 1/2" FITTING: B344.111 FAUCET w/TOP BRACE, TOP & VACUUM,BREAKER.
EX CS 1	COMP. SINK	3/4"	3/4"	2"	1 1/2"	2"		FURNISHED BY OWNER
EX PS 1	PREP. SINK	1/2"	1/2"	F/S	1 1/2"	2"		FURNISHED BY OWNER
EX MS 1	MOP SINK	1/2"	1/2"	2"	1 1/2"	2"		A/S "AKRON SERVICE SINK" 7696.016 w/WALL HANGER 47077-07 RIM GUARD,ACID RESISTING ENAMELED CAST IRON DIMENSION: 24"X20"FAUCET w/VACUUM BREAKER, ROUGH CHROME FINISH. TRAP STANDARD: FITTING: B340. 242 FAUCET w/VACUUM BREAKER, ROUGH CHROME FINISH. TRAP STANDARD:7798.176 w/STRAINER.
EX FS 1	FLOOR SINK			2"	1 1/2"	2"		JOSAM 9032 12"X12"X6 1/4" DEPTH w/ALUM DOME AND 1/2 GRATE
EX FD 1	FLOOR DRAIN			2"	1 1/2"	2"		JOSAM 302-35AJ 6" DIAMETER (FOR RESTRM OR KITCHEN)

PIPE MATERIAL SCHEDULE

SCALE N.T.S — 2

PIPE MATERIAL (SEE SPECS)

		TYPE L COPPER	CLASS 200 ABS	CLASS 200 SDR34	SCH 40 BLACK STEEL	PVC DR 35	UNLINED CLAY PIPE	SCH 40 PVC PIPE	CLASS 150 DUCTILE STEEL	TYPE M COPPER
WATER	INSIDE	⊘								
	OUTSIDE									
SANITARY DRAINAGE	INSIDE					⊘				
	OUTSIDE									
SANITARY VENT	CONCEALED					⊘				
	EXPOSED				⊘					
INDIRECT WASTE	INSIDE									⊘
	OUTSIDE									⊘
GAS	INSIDE				⊘					
	OUTSIDE				⊘					
STORM DRAIN	INSIDE									
	OUTSIDE									

REMARKS
NOTE:
EACH HORIZONTAL DRAINAGE PIPE SHALL BE PROVIDED WITH A CLEANOUT AT ITS UPPER TERMINAL AND EACH RUN OF PIPING, WHICH IS MORE THAN ONE HUNDRED FEET IN TOTAL DELELOPED LENGTH, SHALL BE PROVIDED WITH CLEANOUT FOR EACH ONE HUNDRED FEET , OR FRACTIONTHEREOF, IN LENGTH OF SUCH PIPING.

WATER HEATER DETAIL

SCALE N.T.S — 3

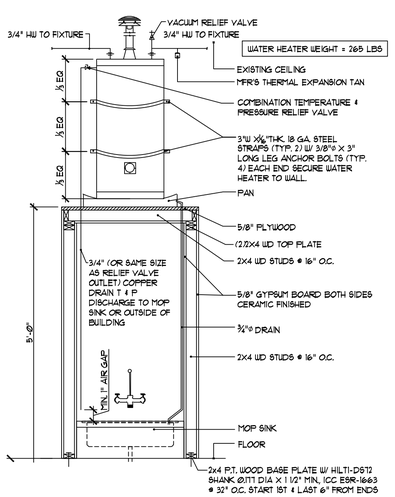

TRAP PRIMER DETAIL

SCALE N.T.S — 4

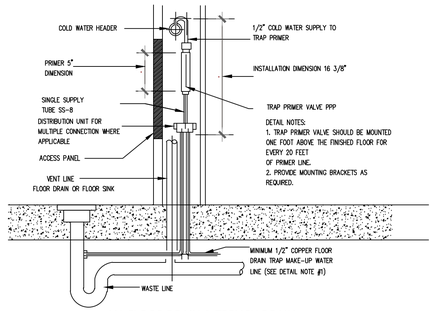

ALL FLOOR DRAIN & TRENCH DRAIN W/TRAP PRIMERS

GENERAL NOTES

SCALE N.T.S — 5

- ALL WORK SHALL COMPLY WITH 2019 C.P.C., CALIFORNIA GREEN BUILDING STANDARDS CODE AND ALL APPLICABLE CODES.
- ALL DRAIN LINES TO SLOPE MINIMUM 2%.
- PROVIDE ALL CLEANOUTS PER C.P.C. 707.0
- ALL WATER LINES TO BE INSULATED PER 2019 C.P.C. AND CALIFORNIA GREEN BUILDING CODES.

NOTE:
PUBLIC LAVATORIES SHALL HAVE CONTROLS TO LIMIT THE WATER TEMPERATURE TO 120 DEGREE FAHRENHEIT.

CONSTRUCTION NOTES:

SCALE N.T.S — 6

1. CONTRACTOR SHALL VISIT THE SITE PRIOR TO BIDDING THIS JOB TO FAMILIARIZE HIMSELF AS TO THE EXTENT OF WORK REQUIRED, AND EXISTING CONDITION, AND SHALL TAKE THESE INTO CONSIDERATION IN THE COST OF HIS BID.

2. CONTRACTOR SHALL FIELD VERIFY THE LOCATION OF THE UTILITIES BEFORE STARTING TRENCHING WORK, OR THE INSTALLATION OF ANY PIPING

3. CONTRACTOR SHALL BE RESPONSIBLE FOR SECURING ALL PERMITS & PAYING ALL FEES REQUIRED FOR WORK SHOWN ON THESE DRAWINGS.

4. THE DRAWINGS ARE DIAGRAMMATIC. THE LOCATION OF THE PIPING IS APPROX. COORDINATE THE LOCATION OF PIPING WITH OTHER TRADES. ANY CONFLICTS WITH OTHER TRADES SHALL BE RESOLVED PRIOR TO INSTALLATION.

DESIGN NOTES

SCALE N.T.S — 7

1. 1/2" CW
2. 3/4" HW & CW
3. 1" CW
4. 1/2" CW UP THRU ROOF TO MAKE-UP AIR UNIT WITH SOV AND VACUUM BREAKER TYPE BACKFLOW PREVENTER
5. POINT OF CONNECTION. CONTRACTOR TO VERIFY LOCATION AND SIZE MAKE NECESSARY ADJUSTMENT OR REPLACE AS REQUIRED.

PIPE SIZING SCHED.

SCALE N.T.S — 8

BASED ON 3.8 /100 FT FRICTION LOSS
TYPE-L COPPER

SIZE	FLUSH TANK: HOT WATER	FLUSH TANK: COLD WATER	FLUSH VALVE: COLD WATER
1/2"	1	1	0
3/4"	6	6	0
1"	15	15	0
1-1/4"	28	28	0
1-1/2"	46	56	14
2"	119	195	88
2-1/2"	245	431	295
3"	406	719	666

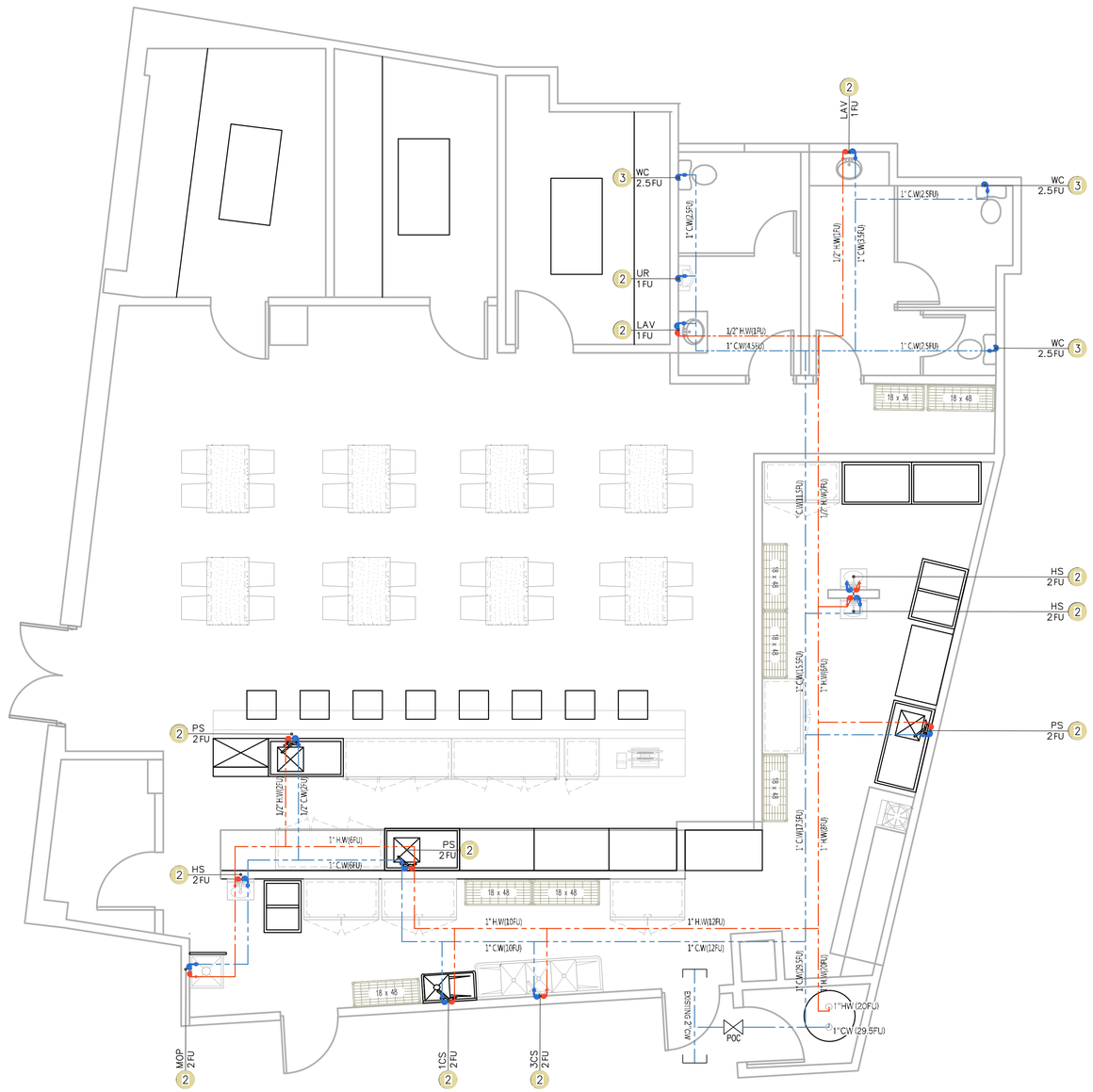

COLD & HOT WATER PLAN

SCALE: 1/4"=1'-0"

ALL WORK SHALL COMPLY WITH 2019 CPC , CA GREEN BUILDING STANDARDS CODE & ALL APPLICABLE CODE

ATHLIT DESIGN

8 Corporate Park #100
Irvine, CA 92606
310-634-9065
Athlitdesignservice@gmail.com

This drawing, its idea, design, and concept is the property of HERA design group. It is not to be reproduced, copied or loaned in part of whole, without written permission obtain the quthority please contact us @ (t)3106349065

LICENSED ARCHITECT
YUBIN XIE
C-40260
REN.01/31/25
STATE OF CALIFORNIA

PROJECT TITLE / ADDRESS
Late Night Bar
18958 Daisetta St # 106,
Rowland Heights, CA 91748

DRAWING TITLE

PLUMBING PLAN

REVISIONS	
DATE	NO.

DATE:

DRAWN BY: S.C.

SCALE: AS NOTED

SHEET NO.

P-1

PLUMBING LEGEND

SCALE N.T.S — 1

—— S ——	S	SANITARY SEWER ABOVE GRADE
— S — —	S	SANITARY SEWER BELOW GRADE
—— GW ——	GW	GREASE WASTE BELOW GRADE
—— V ——	V	SANITARY VENT
—— D ——	D	INDIRECT DRAIN
—— — ——	CW	DOMESTIC COLD WATER
—— - - ——	HW	DOMESTIC HOT WATER
—— - - - ——	HWR	DOMESTIC HOT WATER RETURN
—— G ——	G	NATURAL GAS
	COTG	CLEANOUT TO GRADE
	FCO	FLOOR CLEANOUT
	WCO	WALL CLEANOUT
	SOV	SHUT-OFF VALVE
		GAS OR GATE COCK
	POC	POINT OF CONNECTION
WC-1		PLUMBING FIXTURE DESIGNATION
WH 1		PLUMBING EQUIPMENT DESIGNATION
	FD	FLOOR DRAIN
	FS	FLOOR SINK
(E)	EXIST'G	EXISTING
(N)		NEW
	ABV	ABOVE
	VCP	VITRIFIED CLAY PIPE
	VTR	VENT THROUGH ROOF
	CLG	CEILING
	AP	ACCESS PANEL

PIPE/FOOTING LOCATION

SCALE N.T.S — 2

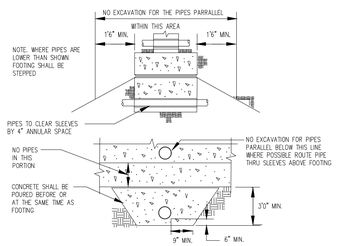

TRAP PRIMER DETAIL

SCALE N.T.S — 3

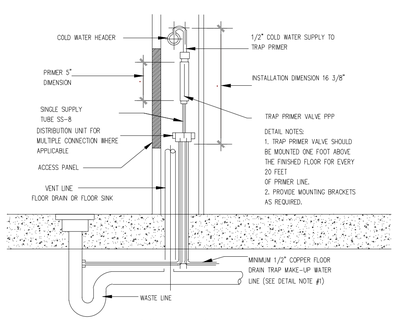

ALL FLOOR DRAIN & TRENCH DRAIN W/TRAP PRIMERS

PLUMBING DESIGN NOTES

SCALE N.T.S — 4

- (A) 2" W, 1 1/2"V.
- (B) 3" W, 2"V.
- (C) 2" V UP & DN B.G.
- (D) 3" VTR
- (E) 2" VTR
- (F) P.O.C

FLOOR SINK INDIRECT VENT DETAIL

SCALE N.T.S — 5

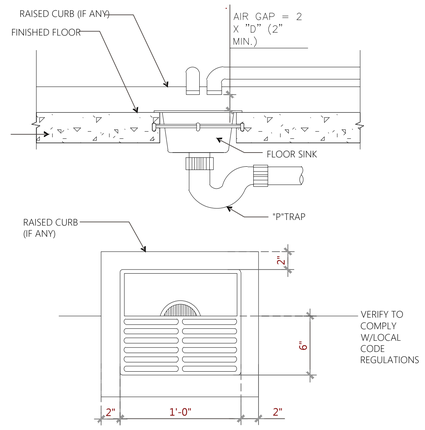

NOTES:

SCALE N.T.S — 6

No more than one-third (1/3) of the total permitted length, per Table 703.2, of any minimum sized vent shall be installed in a horizontal position.

Horizontal vents below the flood rim of the fixture not allowed for plumbing Fixtures that are within trap arm distance of walls.

The maximum developed length of the trap arm from the trap weir to the inner edge of the vent shall be within the distance given in Table 1002.2. The minimum trap arm length shall be two (2) times the diameter of the trap arm.
Please correct.

that indirect waste piping from food handling fixtures or equipment shall be separately piped by means of an air gap to the indirect waste receptor and shall not be combined with any other indirect waste piping.

CONSTRUCTION NOTES:

1. CONTRACTOR SHALL VISIT THE SITE PRIOR TO BIDDING THIS JOB TO FAMILIARIZE HIMSELF AS TO THE EXTENT OF WORK REQUIRED, AND EXISTING CONDITION, AND SHALL TAKE THESE INTO CONSIDERATION IN THE COST OF HIS BID.
2. CONTRACTOR SHALL FIELD VERIFY THE LOCATION OF THE UTILITIES BEFORE STARTING TRENCHING WORK, OR THE INSTALLATION OF ANY PIPING,
3. CONTRACTOR SHALL BE RESPONSIBLE FOR SECURING ALL PERMITS & PAYING ALL FEES REQUIRED FOR WORK SHOWN ON THESE DRAWINGS.
4. THE DRAWINGS ARE DIAGRAMMATIC. THE LOCATION OF THE PIPING IS APPROX. COORDINATE THE LOCATION OF PIPING WITH OTHER TRADES. ANY CONFLICTS WITH OTHER TRADES SHALL BE RESOLVED PRIOR TO INSTALLATION.

GREASE TRAP/INTERCEPTOR

SCALE N.T.S — 7

The grease trap must be installed above ground.
Provide how this equipment will be installed, ensure the following:

-The device shall be installed on minimum six (6) inch high, easily cleanable legs or on a four (4) inch high continuously coved curb.

-Floor mounted equipment must have approved finishes so as to prevent the accumulation of grease, grime, residue and debris. The floor shall be continuous in design extending up the wall of the grease trap or curb 4", forming a minimum 3/8" radius coved base as an integral unit.

-All conduit, plumbing, etc., not concealed within walls, must be installed at least six (6) inches off the floor and 1/2 inch away from walls. All exposed flex conduit is to be "seal-tight" or equivalent.

VENT LINE DATA — 8

PIPE SIZE	HORIZ OR VERT MAX. FIXTURE UNITS	MAX LENGTH
1-1/4"	1 F.U	45 FT.
1-1/2"	8 F.U	60 FT
2"	24 F.U	120 FT
2-1/2"	48 F.U	180 FT
3"	84 F.U	212 FT

HORIZ. WASTE LINE DATA — 9

PIPE SIZE	2% SLOPE MAX. FIXTURE UNITS	1% SLOPE MAX. FIXTURE UNITS
2"	8 F.U	——
3"	35 F.U	——
4"	216 F.U	172 F.U

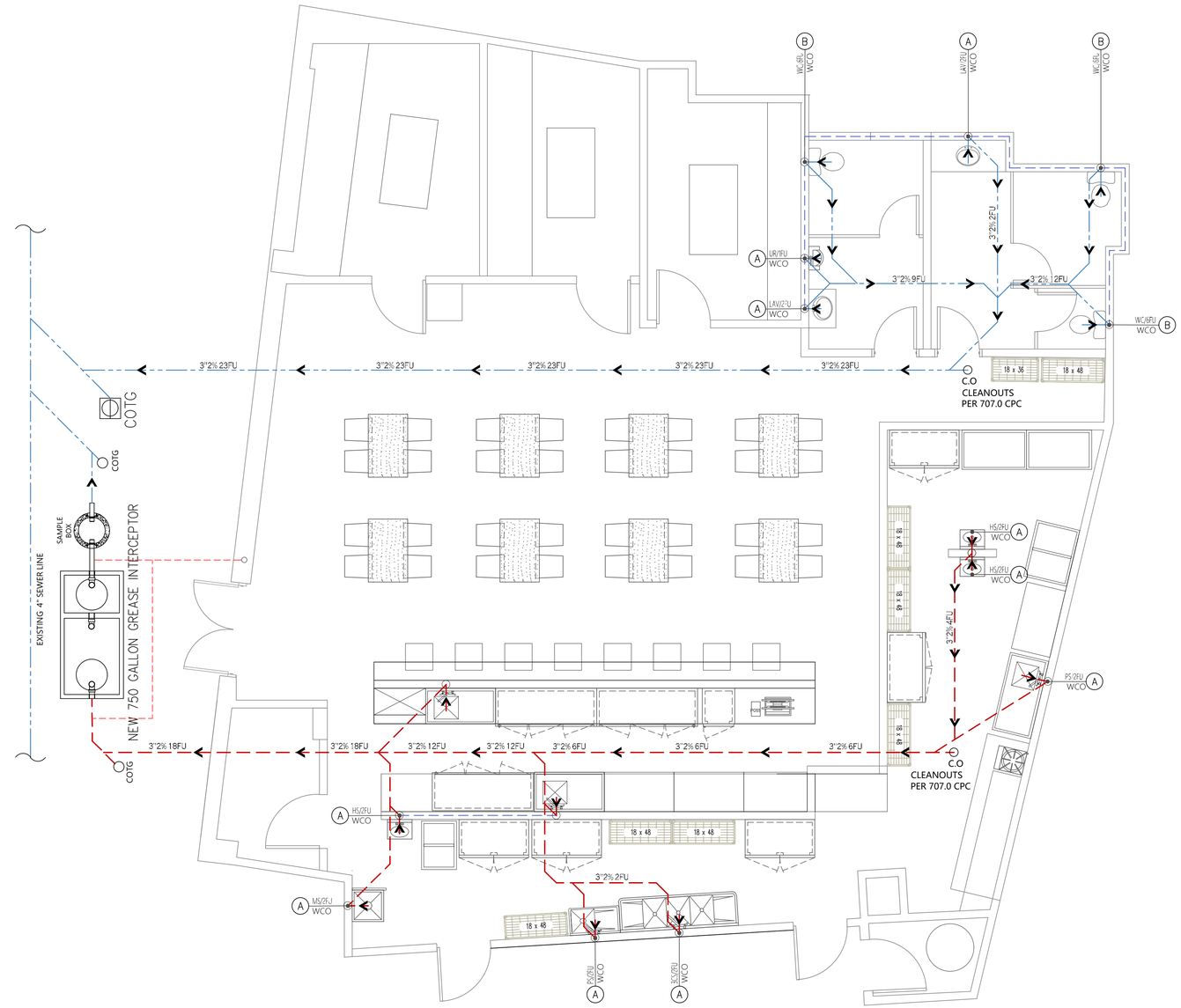

WASTE AND VENT PLAN (A)

SCALE: 1/4"=1'-0"

ALL FOG DISPOSAL SYSTEMS SHALL MEET THE REQUIREMENTS OF SECTION 1015.0 OF THE CALIFORNIA PLUMBING CODE.

ATHLIT DESIGN

8 Corporate Park #100
Irvine, CA 92606
310-634-9065
Athlitdesignservice@gmail.com

This drawing, its idea, design, and concept is the property of HERA design group. It is not to be reproduced, copied or loaned in part of whole, without written permission obtain the quthority please contact us @ (t)3106349065

LICENSED ARCHITECT
YUBIN XIE
C-40260
REN.01/31/25
STATE OF CALIFORNIA

PROJECT TITLE / ADDRESS

Late Night Bar
18958 Daisetta St # 106,
Rowland Heights, CA 91748

DRAWING TITLE

WASTE PLAN

REVISIONS	
DATE	NO.

DATE:

DRAWN BY: S.C.

SCALE: AS NOTED

SHEET NO.

P-2

LA COUNTY PLANNING

PROJECT NUMBER
PRJ2024-002530-(1)

HEARING DATE
1/20/2026

REQUESTED ENTITLEMENT(S)
Conditional Use Permit No. RPPL2024003803

PROJECT SUMMARY

OWNER / APPLICANT
Chengkui Yu / Late Night Bar

MAP/EXHIBIT DATE
7/2/2024

PROJECT OVERVIEW
The continued sale of beer and wine for on-site consumption at the existing restaurant

LOCATION
18958 Daisetta Street Suite 106, Rowland Heights CA 91748

ACCESS
Daisetta Street

ASSESSORS PARCEL NUMBER(S)
8761-011-014

SITE AREA
0.71 Acres

GENERAL PLAN / LOCAL PLAN
East San Gabriel Valley Area Plan

ZONED DISTRICT
Puente

PLANNING AREA
East San Gabriel Valley Area Plan

LAND USE DESIGNATION
CG (General Commercial)

ZONE
MXD (Mixed Use Development)

PROPOSED UNITS
N/A

MAX DENSITY/UNITS
N/A

COMMUNITY STANDARDS DISTRICT
Rowland Heights CSD

ENVIRONMENTAL DETERMINATION (CEQA)
Class 1 Categorical Exemption – Existing Facilities

KEY ISSUES

- Consistency with the Los Angeles County General Plan and East San Gabriel Valley Area Plan
- Satisfaction of the following portions of Title 22 of the Los Angeles County Code:
  - Section 22.158.050 (Conditional Use Permit Findings and Decision Requirements)
  - Section 22.140.030 (Alcoholic Beverage Sales Requirements)
  - Section 22.366.090 - Rowland Heights Community Standards District
  - Section 22.26.030 (Mixed Use Development Zone Requirements)

CASE PLANNER:
Carl Nadela, AICP

PHONE NUMBER:
(213) 893 - 7010

E-MAIL ADDRESS:
cnadela@planning.lacounty.gov

LOS ANGELES COUNTY
DEPARTMENT OF REGIONAL PLANNING

DRAFT FINDINGS OF THE HEARING OFFICER
AND ORDER
PROJECT NO. PRJ2024-002530-(1)
CONDITIONAL USE PERMIT NO. RPPL2024003803

RECITALS

1. **HEARING DATE(S).**

   The Los Angeles County ("County") Hearing Officer conducted a duly-noticed public hearing in the matter of Conditional Use Permit ("CUP") No. **RPPL2024003803** on January 20, 2026.

2. **HEARING PROCEEDINGS.**

   Reserved.

3. **ENTITLEMENT(S) REQUESTED.**

   The permittee, Chengkui Yu / Late Night Bar ("Permittee"), requests the CUP to authorize the continued sale of beer and wine for on-site consumption, from 5:00 pm to 2:00 am, with accessory live entertainment (karaoke), at an existing restaurant ("Project") on a property located at 18958 Daisetta Street Suite 106 in the unincorporated community of Rowland Heights ("Project Site") in the MXD (Mixed Use Development) Zone pursuant to County Code Section 22.26.030 (Mixed Use Development Zone).

4. **PREVIOUS ENTITLEMENTS.**

   The existing commercial complex and the development of the subject tenant space into the existing restaurant, were authorized in 2007 and 2009 with the approval of Plot Plan ("PP") 200601003 and PP 200900033, respectively. The sale of a full-line of alcoholic beverages for on-site consumption at the subject restaurant was previously authorized by the approval of CUP 200900119 on July 7, 2010, but the restaurant owner only obtained a beer and wine license from the California Department of Alcoholic Beverage Control ("ABC") for the subject restaurant at that time. CUP 200900119 expired on July 7, 2020.

5. **LAND USE DESIGNATION.**

   The Project Site is located within the CG (General Commercial) land use category of the East San Gabriel Valley Area Plan ("Area Plan") Land Use Policy Map, a component of the General Plan.

6. **ZONING.**

The Project Site is located in the Puente Zoned District and is currently zoned MXD. Pursuant to County Code Section 22.26.030 (Mixed Use Development Zone), a CUP is required for the sale of alcohol for on-site consumption at the Project Site. The Project Site is also located within the East Pasadena East San Gabriel Valley Planning Area Standards District ("PASD") and the Rowland Heights Community Standards District ("CSD").

7. **SURROUNDING LAND USES AND ZONING**

LOCATION	AREA PLAN LAND USE POLICY	ZONING	EXISTING USES
NORTH	CG	MXD	Commercial centers
EAST	CG, H9 (Residential 9 – 0 to 9 Dwelling Units per Net Acre	MXD, R-1-6,000 (Single-Family Residence - 6,000 Square Feet Minimum Required Lot Area	Commercial center, single-family residences
SOUTH	CG	MXD	Commercial centers
WEST	CG, H18 (Residential 18 – 0 to 18 Dwelling Units per Net Acre)	MXD, R-3 (Limited Density Multiple Residence)	Golf course, mobilehome park

8. **PROJECT AND SITE PLAN DESCRIPTION.**

A. Existing Site Conditions

The Project Site is 0.71 acres in size and consists of one legal lot. The Project Site is mostly rectangular in shape with flat topography and is developed with a two-story commercial structure and appurtenant parking spaces that connects to a different commercial complex to the south.

The subject restaurant is currently selling beer and wine during the entirety of its operating hours from 5:00 pm to 2:00 am. The subject restaurant was also offering karaoke to its customers without the appropriate LA County Planning approvals until they were advised by Planning Staff to stop doing so.

Records of the ABC indicate that six licenses for alcohol sales for onsite consumption are allowed in the Census Tract where the Project Site is located (4082.13), while 32 such licenses are currently active, including the existing beer and wine license of the subject restaurant. This indicates that the Project Site is located in a Census Tract with an overconcentration of ABC licenses. ABC records also indicate that the Project Site is located in a High Crime Reporting District. ABC Records also show a disciplinary history for the licensee where the permittee was penalized for permitting a minor to consume alcohol on the premises in 2021. The

Rowland Heights Community Coordinating Council ("RHCCC") opposed the upgrading of the existing beer and wine license to a license to sell a full-line of alcohol.

B. Site Access

The Project Site is accessible via Daisetta Street, a 84-foot wide public street to the north, and a driveway connecting to a different commercial center to the south. Direct access to the Project Site is provided by an ingress/egress driveway on Daisetta Street to the north. Indirect access is available from a different commercial center to the south.

C. Site Plan

The Site Plan depicts the existing commercial building on the western portion of the property and the parking lot with 35 parking spaces on the eastern and southern portions. The subject restaurant is located in the northernmost tenant space of the commercial structure. Direct access to the Project Site is provided by an ingress/egress driveway on Daisetta Street to the north. Indirect access is available from a different commercial center to the south. A separate Floor Plan shows the interior layout of the subject restaurant, with the public access coming from the east leading to the main dining area. Three private rooms are indicated on the southern portion of the restaurant, with a cashier/service area on the northern portion and the public restrooms and backroom service areas located on the western portion.

D. Parking

There are a total of 35 parking spaces provided at the Project Site in a parking lot located on the eastern and southern portions of the property. A total of 37 parking spaces are required on the Project Site based on the previous approval of the existing commercial building and the subject restaurant. A trash enclosure has been built on two parking spaces, thus reducing the total number of parking spaces at the Project Site to 35 parking spaces. The CUP will include a requirement to restore the total number of parking spaces at the Project Site to 37 parking spaces, in compliance with previous approvals.

9. **CEQA DETERMINATION.**

Prior to the Hearing Officer's public hearing on the Project, LA County Planning staff determined that the Project qualified for a Categorical Exemption (Class 1 – Existing Facilities) under the California Environmental Quality Act ("CEQA") and the County Environmental Document Reporting Procedures and Guidelines. The Project is for the continuation of the accessory sale of beer and wine for on-site consumption at an existing restaurant located within an existing commercial complex. No modifications or physical development are proposed at this time. The Project Site is not located within or in close proximity to a historical resource, a hazardous waste site, or a scenic highway. No significant effect due to "unusual circumstances" and no cumulative impacts are anticipated. Therefore, no exceptions to the categorical exemption apply

to the Project as per Section 15300.2 of the California Code of Regulations, and the project is categorically exempt.

10. **COMMUNITY OUTREACH.**

On August 12, 2025, prior to the Hearing Officer's public hearing on the Project, the Permittee presented the Project to members of the Board of the Rowland Heights Community Coordinating Council ("RHCCC") to ask if they had any comments on the Project. In October 2025, the Permittee also distributed flyers to the restaurant's patrons and to neighboring businesses and residences.

11. **PUBLIC COMMENTS.**

The RHCCC President, in a letter dated September 30, 2025 indicated that the RHCCC Board had voted to oppose the CUP application for the sale of full line of alcohol for on-site consumption at the Project Site, stating that the "Board believes increasing to full line of alcohol is not in the best interest of the Rowland Heights Community".

12. **AGENCY RECOMMENDATIONS.**

A. Sheriff: Recommended denial of the request for a full-line of alcohol for on-site consumption at the Project Site, in a letter dated on December 15, 2025, indicating that they do not recommend any additional licensing be granted to the existing restaurant at the Project Site. The LA County Sheriff's Department ("Sheriff") report an unusually large number of major incidents at the subject restaurant and at the larger commercial complex it is located in, including assault with a deadly weapon, burglary and theft, among others.

13. **LEGAL NOTIFICATION.**

Pursuant to Section 22.222.120 (Public Hearing Procedure) of the County Code, the community was properly notified of the public hearing by mail, newspaper (San Gabriel Valley Tribune), and property posting. Additionally, the Project was noticed and case materials were available on LA County Planning's website. On December 10, 2025, a total of 154 Notices of Public Hearing were mailed to all property owners as identified on the County Assessor's record within a 1,000-foot radius from the Project Site, as well as to those on the courtesy mailing list for the Puente Zoned District and to any additional interested parties.

<u>GENERAL PLAN CONSISTENCY FINDINGS</u>

14. **LAND USE POLICY.**

The Hearing Officer finds that the Project is consistent with the Land Use Policy designation of the Area Plan because the CG land use category is intended for local-serving commercial uses, including retail, restaurants, and personal and professional services, single family and multifamily residences; and residential and commercial

mixed uses, categories into which the continued accessory beer and wine sales for on-site consumption at the existing restaurant falls.

15. **GOALS AND POLICIES.**

The Hearing Officer finds that the Project is consistent with the goals and policies of the General Plan and Area Plan.

General Plan

- *Goal LU 5: Vibrant, livable and healthy communities with a mix of land uses, services and amenities.*
- *Policy LU 5.2: Encourage a diversity of commercial and retail services, and public facilities at various scales to meet regional and local needs.*
- *Policy LU 5.4: Encourage community-serving uses, such as early care and education facilities, grocery stores, farmers markets, restaurants, and banks to locate near employment centers.*

A variety of commercial and recreational uses have been established to the north, south and immediate east and west of the existing restaurant. The existing restaurant and continued accessory beer and wine sales for on-site consumption contribute to the variety and diversity of community-serving uses in the area.

- *Goal LU 7: Compatible land uses that complement neighborhood character and the natural environment.*
- *Policy LU 7.1: Reduce and mitigate the impacts of incompatible land uses, where feasible, using buffers and other design techniques.*

There are a number of similar restaurants and public eating places in the vicinity of the Project Site. The existing restaurant with continued beer and wine sales for on-site consumption complements these uses as well as the other surrounding commercial and recreational uses when sold during regular dining hours. While most of the parcels surrounding the Project Site have been developed with commercial and recreational uses, the neighborhoods further to the east and west are developed with single-family residences and a mobilehome park, respectively. It is important to preserve this residential character and ensure that the commercial uses around this area do not have significant adverse impact on the surrounding residential neighborhoods. The existing restaurant and commercial complex are sufficiently buffered from the residential areas by concrete block walls, landscaping, existing structures, parking lots and the 100-foot width of Nogales Street. The requested continued accessory sale of beer and wine for on-site consumption at the existing restaurant is not expected to result in any adverse impacts on these surrounding areas. However, because of a history of offering live entertainment (karaoke) to its customers with prior approval from LA County Planning as well as a prior violation of their ABC license in 2021, combined with the above-normal number and serious nature of incident reports of major crimes at and near the Project Site, there is a need to limit the hours of beer and wine sales at the Project Site to the hours of 10:00 am to 10:00 pm only, which covers regular brunch, lunch and

dinner hours. Furthermore, prohibiting live entertainment, including karaoke, will ensure that only regular dining services are offered at the subject restaurant, and avoid any adverse impacts that live entertainment might bring to the Project Site.

Area Plan

- *Policy LU-1.2: Complete Communities. Foster a land use pattern that brings everyday needs and amenities within walking distance of residential neighborhoods, including public transit, parks, schools, commercial services, and other daily needs.*
- *Policy LU-3.1: Land Use Diversity. Enable a more diverse land use pattern to meet the needs of residents and employees, including increased housing options, viable commercial uses, a variety of employment opportunities, ample parks and open spaces, and a range of superior community services and amenities to support the mental, physical, emotional, economic, and social well-being of the community.*

A variety of commercial and recreational uses have been established in the immediate vicinity of the Project Site. There are also single-family residences and a mobilehome park located further east and west of the Project Site, respectively. The existing restaurant and the continued sale of beer and wine for on-site consumption contribute to the variety and diversity of community-serving uses in the area that are within walking distance from the surrounding residential areas. The limitation on the hours of beer and wine sales at the Project Site to the hours of 10:00 am to 10:00 pm only, which covers regular brunch, lunch and dinner hours and the prohibition of live entertainment, including karaoke, will ensure that only regular dining services are offered at the subject restaurant.

ZONING CODE CONSISTENCY FINDINGS

16. **PERMITTED USE IN ZONE.**

The Hearing Officer finds that the Project is consistent with the MXD zoning classification as the continued sale of beer and wine for on-site consumption at an existing restaurant is permitted when a CUP is obtained pursuant to County Code Section 22.26.030 (Mixed Use Development Zone); the existing restaurant use is permitted by right. Accessory live entertainment, including karaoke, may be permitted with a Ministerial Site Plan Review in a restaurant having an occupancy load of less than 200 persons and located within an enclosed building.

17. **REQUIRED YARDS.**

While the Project is a proposal for the continued sale of beer and wine for on-site consumption at an existing restaurant, the Hearing Officer finds that the underlying restaurant and the commercial complex where the restaurant is located is consistent with the standards identified in County Code Section 22.26.030 (Mixed Use Development Zone). The existing commercial complex where the subject existing restaurant is located was developed in 2007 with the approval of PP 200601003. These approvals determined that the existing commercial building was in compliance with the

required yards at the time of development. No physical development is proposed with this Project.

18. **HEIGHT.**

While the Project is a proposal for the continued sale of beer and wine for on-site consumption at an existing restaurant, the Hearing Officer finds that the Project is consistent with the standard identified in County Code Section 22.26.030 (Mixed Use Development Zone). The existing commercial complex where the subject existing restaurant is located, was developed in 2007 with the approval of PP 200601003. These approvals determined that the existing commercial building was in compliance with the maximum permitted height at the time of development. No physical development is proposed with this Project.

19. **PARKING.**

While the Project is a proposal for the continued sale of beer and wine for on-site consumption, the Hearing Officer finds that that the Project will be required to be consistent with the standard identified in County Code Section 22.112.070 (Required Parking Spaces). There are a total of 35 parking spaces provided at the Project Site in a parking lot located on the eastern and southern portions of the property. A total of 37 parking spaces are required on the Project Site based on the previous approval of the existing commercial building and the subject restaurant. A trash enclosure has been built on two parking spaces, thus reducing the total number of parking spaces at the Project Site to 35 parking spaces. The CUP will include a condition to restore the total number of parking spaces at the Project Site to 37 parking spaces, in compliance with previous approvals.

20. **SIGNS.**

While the Project is a proposal for the continued sale of beer and wine for on-site consumption, the Hearing Officer finds that that the Project is consistent with the standard identified in County Code Chapter 22.114 (Signs). The existing 25-square-foot wall sign of the subject restaurant is in compliance with Title 22 (Planning and Zoning) of the County Code, given the 48 square feet maximum allowed for signs for the 48 feet of building frontage of the existing restaurant.

21. **PLANNING AREA STANDARDS DISTRICT ("PASD").**

While the Project is a proposal for continued beer and wine sales for on-site consumption, the Hearing Officer finds that the Project is consistent with the standards identified in County Code Chapter 22.366 (East San Gabriel Valley PASD). Since the Project consists of the request for the accessory sale of beer and wine for on-site consumption at an existing restaurant, there are no East San Gabriel Valley PASD provisions that are applicable to this Project.

22. **COMMUNITY STANDARDS DISTRICT ("CSD").**

While the Project is a proposal for continued beer and wine sales for on-site consumption, the Hearing Officer finds that the Project is consistent with the standards identified in County Code Section 22.366.090 (Rowland Heights CSD). Since the Project consists of the request for the accessory sale of beer and wine for on-site consumption at an existing restaurant, there are no Rowland Heights CSD provisions that are applicable to this Project.

CONDITIONAL USE PERMIT FINDINGS

23. **The Hearing Officer finds that, with the imposition of appropriate operational restrictions, the proposed use at the site will not adversely affect the health, peace, comfort, or welfare of persons residing or working in the surrounding area; will not be materially detrimental to the use, enjoyment, or valuation of property of other persons located in the vicinity of the site; and will not jeopardize, endanger, or otherwise constitute a menace to the public health, safety, or general welfare.** Allowing the continued incidental sale of beer and wine for on-site consumption at the existing restaurant during restricted hours and without live entertainment does not expand or intensify the current use at the Project Site. The Project provides restaurant patrons with a convenient option to consume an alcoholic beverage with their meal. This use is also consistent with the surrounding commercial and recreational uses and is sufficiently buffered from the residential neighborhoods further away. It is unlikely the continued incidental sale of beer and wine at an existing restaurant will adversely affect these uses, provided that the beer and wine will only be allowed to be consumed indoors, within the restaurant premises, and only the sale of beer and wine occur during the hours of 10:00 am to 10:00 pm only, which covers normal brunch, lunch and dinner hours. The floor plan of the restaurant only depicts dining tables without a bar component. Several conditions of approval, such as limiting the hours of beer and wine sale to 10:00 am to 10:00 pm and prohibition of off-site consumption and live entertainment, including karaoke, have been incorporated into the CUP to ensure that only regular restaurant services are offered at the subject restaurant and potential negative impacts to nearby sensitive uses and the surrounding residential areas are avoided. The CUP conditions will also ensure that additional safety measures and monitoring is available on the Project Site, such as security cameras in the parking lot that can be accessed by the Sheriff as needed, and regular inspections by LA County Planning Zoning Enforcement.

24. **The Hearing Officer finds that the proposed site is adequate in size and shape to accommodate the yards, walls, fences, parking and loading facilities, landscaping and other development features prescribed in Title 22, or as is otherwise required in order to integrate said use with the uses in the surrounding area.** The existing restaurant is located within an existing commercial building. The subject property as well as the overall commercial complex and subject restaurant were developed in accordance with the development standards prescribed under Title 22 (Planning and Zoning) of the County Code at the time of approval in 2007 and 2009, respectively. The Project proposes no physical tenant improvements.

25. **The Hearing Officer finds that the proposed site is adequately served by highways or streets of sufficient width and improved as necessary to carry the kind and quantity of traffic such use would generate, and by other public or private service facilities as are required.** Vehicular access is provided via Daisetta Street to the north and a driveway connecting the Project Site to a different commercial center to the south. Daisetta Street is an 84-foot public street that connects to Nogales Street, a 100-foot-wide Major Highway as classified by the County Master Plan of Highways, to the east. The Project Site's two ingress/egress access points to the north and south allow motorists to easily enter and leave the Project Site. The Project is a request for the continued sale of beer and wine for on-site consumption at an existing restaurant and is not anticipated to generate additional trips aside from those already generated by the existing restaurant.

26. The Hearing Officer finds that to ensure continued compatibility between the Project and the surrounding land uses, it is necessary to limit the CUP to five years.

SUPPLEMENTAL FINDINGS

27. **The Hearing Officer finds that the requested use at the proposed location will not adversely affect the use of a place used exclusively for religious worship, school, park, playground, or any similar use within a 600-foot radius.** There are no sensitive uses within a 600-foot radius of the Project Site.

28. **The Hearing Officer finds that the requested use at the proposed location is sufficiently buffered in relation to any residential area within the immediate vicinity, so as not to adversely affect said area.** While most of the parcels around the Project Site have been developed with commercial and recreational uses, further to the east are single-family residences while further to the west is a mobilehome park. These residential uses are sufficiently buffered from the Project Site by concrete block walls, landscaping, existing structures, parking lots and the 100-foot width of Nogales Street. With the establishment of adequate operational controls such as a restriction on the allowed hours of alcohol sales, the prohibition of offsite consumption of alcohol, and the prohibition of live entertainment including karaoke, the proposed continued accessory sale of beer and wine for onsite consumption at the existing restaurant at the subject location is compatible with all these surrounding uses in the area.

29. **The Hearing Officer finds that, with the imposition of appropriate operational restrictions, the requested use at the proposed location will not adversely affect the economic welfare of the nearby community.** The continued sales of beer and wine for on-site consumption at the existing restaurant is not anticipated to adversely affect the economic welfare of the nearby community, provided that the beer and wine will only be allowed to be consumed indoors within the restaurant premises, and only be sold during the hours of 10:00 am to 10:00 pm, which covers normal brunch, lunch and dinner hours. Several conditions of approval, such as limiting the hours of beer and wine sale to 10:00 am to 10:00 pm and prohibition of off-site consumption and live entertainment, including karaoke, have been incorporated into the CUP to ensure that only regular restaurant services are offered at the subject restaurant and potential negative impacts to nearby sensitive uses and the surrounding residential areas are

avoided. The accessory beer and wine sales in conjunction with meals inside a bonafide public eating establishment is complementary and would be compatible with the surrounding existing commercial and recreational uses. It will contribute to the general economic activity in the area by providing more dining options to residents, workers and visitors in the surrounding vicinity.

30. **The Hearing Officer finds that the exterior appearance of the structure will not be inconsistent with the exterior appearance of commercial structures already constructed or under construction within the immediate neighborhood, so as to cause blight, deterioration, or substantially diminish or impair property values within the neighborhood.** The continued sale of beer and wine for on-site consumption at the existing restaurant will not change the exterior appearance of the existing commercial building. The Project also does not propose any physical changes to the exterior appearance of the commercial building. The sale of beer and wine in conjunction with food within a fully operated restaurant, particularly with additional requirements for the regular maintenance of the Project Site, will not cause blight, deterioration, or substantially diminish or impair property values within the community.

31. **The Hearing Officer finds that even though the proposed sale of alcohol would occur at a site within a high crime reporting district or in an area of undue concentration, pursuant to the California Alcoholic Beverage Control ("ABC") Act and the regulations adopted under that Act, or that the use selling alcoholic beverages for off-site consumption is proposed within a 500-foot radius of another use selling alcoholic beverages for off-site consumption, the sale of alcohol at the subject property contributes to the public convenience or necessity.** According to ABC, six licenses for alcohol sales for onsite consumption are allowed in the Census Tract where the Project Site is located (4082.13), while 32 such licenses are currently active, including the existing license for the subject restaurant. This indicates that the Project Site is located in an area with an overconcentration of alcohol sales as defined and determined by ABC. ABC further indicates that the Project Site is located in a High Crime Reporting District. However, the public convenience of allowing the patrons of the subject restaurant to partake of beer and wine together with their regular meals at the restaurant outweighs this fact. On the other hand, this needs to be balanced with the adverse effects of the easy availability of alcoholic beverages either too early or too late in the day. Because of these, the public convenience and necessity of selling a full line of alcohol at the site can only be established for the hours of 10:00 am to 10:00 pm. Several conditions of approval, such as limiting the hours of beer and wine sale to 10:00 am to 10:00 pm and prohibition of off-site consumption and live entertainment, including karaoke, have been incorporated into the CUP to ensure that only regular restaurant services are offered at the subject restaurant and potential negative impacts to nearby sensitive uses and the surrounding residential areas are avoided. The CUP conditions will also ensure that additional safety measures and monitoring is available on the Project Site, such as security cameras in the parking lot that can be accessed by the Sheriff as needed, and regular inspections by LA County Planning Zoning Enforcement.

ENVIRONMENTAL FINDINGS

32. The Hearing Officer finds that that the Project is exempt from the California Environmental Quality Act pursuant to State CEQA Guidelines sections 15301 (Class 1, Existing Facilities) categorial exemption. The Project is for the continued accessory sale of beer and wine for on-site consumption at an existing restaurant located within an existing commercial complex. No modifications or physical development are proposed. The Project Site is not in a hazardous waste site, nor a designated historic district. There are also no significant cumulative impacts nor unusual circumstances associated with the Project. There are no exceptions to the proposed exemptions and thus, the exemption still applies to the Project.

ADMINISTRATIVE FINDINGS

33. **LOCATION OF DOCUMENTS.**

The location of the documents and other materials constituting the record of proceedings upon which the Hearing Officer's decision is based in this matter is at LA County Planning, 13th Floor, Hall of Records, 320 West Temple Street, Los Angeles, California 90012. The custodian of such documents and materials shall be the Section Head of the Puente Whittier Development Services Section, LA County Planning.

BASED ON THE FOREGOING, THE HEARING OFFICER CONCLUDES THAT:

A. The existing use, with the attached conditions, will be consistent with the adopted General Plan and Area Plan.

B. The existing use, with the attached conditions, at the site will not adversely affect the health, peace, comfort or welfare of persons residing or working in the surrounding area, will not be materially detrimental to the use, enjoyment or valuation of property of other persons located in the vicinity of the site, and will not jeopardize, endanger or otherwise constitute a menace to the public health, safety or general welfare.

C. The site is adequate in size and shape to accommodate the yards, walls, fences, parking and loading facilities, landscaping and other development features prescribed in Title 22 of the County Code, or as is otherwise required in order to integrate said use with the uses in the surrounding area.

D. The site is adequately served by highways or streets of sufficient width and improved as necessary to carry the kind and quantity of traffic such use would generate, and by other public or private service facilities as are required.

E. The existing use, with the attached conditions, at the site will not adversely affect the use of a place used exclusively for religious worship, school, park, playground or any similar use within a 600-foot radius.

F. The existing use, with the attached conditions, at the site is sufficiently buffered in relation to any residential area within the immediate vicinity so as not to adversely affect said area.

G. The existing use, with the attached conditions, at the site will not adversely affect the economic welfare of the surrounding community.

H. The exterior appearance of the structure will not be inconsistent with the exterior appearance of commercial structures already constructed or under construction within the immediate neighborhood so as to cause blight, deterioration, or substantially diminish or impair property values within said neighborhood.

I. With the imposition of a number of conditions, the public convenience for the restaurant selling alcoholic beverages for on-site consumption outweighs the fact that it is located in an area with an undue concentration of ABC licenses and an area identified as a High Crime Reporting District as determined by ABC.

THEREFORE, THE HEARING OFFICER:

1. Finds that the Project is exempt from the California Environmental Quality Act pursuant to State CEQA Guidelines section 15301 (Class 1, Existing Facilities categorical exemption); and

2. Approves **CONDITIONAL USE PERMIT NO. RPPL2024003803**, subject to the attached conditions.

ACTION DATE: January 20, 2026

MM:CN

12/2/2024

LOS ANGELES COUNTY
DEPARTMENT OF REGIONAL PLANNING

DRAFT CONDITIONS OF APPROVAL
PROJECT NO. PRJ2024-002530-(1)
CONDITIONAL USE PERMIT NO. RPPL2025003803

PROJECT DESCRIPTION

The project is a request to authorize the continued sale of beer and wine for on-site consumption at an existing restaurant within an existing commercial complex in the MXD (Mixed Use Development) Zone subject to the following conditions of approval:

GENERAL CONDITIONS

1. **Permittee**. Unless otherwise apparent from the context, the term "Permittee" shall include the applicant, owner of the property, and any other person, corporation, or other entity making use of this grant.

2. **Affidavit of Acceptance**. This grant shall not be effective for any purpose until the Permittee, and the owner of the subject property if other than the Permittee, have filed at the office of the Los Angeles County ("County") Department of Regional Planning ("LA County Planning") their affidavit stating that they are aware of and agree to accept all of the conditions of this grant, and that the conditions of the grant have been recorded as required by Condition No. 7, and until all required monies have been paid pursuant to Condition Nos. 10. Notwithstanding the foregoing, this Condition No. 2 and Condition Nos. 4, 5, and 9 shall be effective immediately upon the date of decision of this grant by the County.

3. **Date of Final Approval**. Unless otherwise apparent from the context, the term "date of final approval" shall mean the date the County's action becomes effective pursuant to County Code Section 22.222.230 (Effective Date of Decision and Appeals).

4. **Indemnification**. The Permittee shall defend, indemnify, and hold harmless the County, its agents, officers, and employees from any claim, action, or proceeding against the County or its agents, officers, or employees to attack, set aside, void, or annul this permit approval, which action is brought within the applicable time period of Government Code section 65009 or any other applicable limitations period. The County shall promptly notify the Permittee of any claim, action, or proceeding and the County shall reasonably cooperate in the defense. If the County fails to promptly notify the Permittee of any claim, action, or proceeding, or if the County fails to cooperate reasonably in the defense, the Permittee shall not thereafter be responsible to defend, indemnify, or hold harmless the County.

5. **Litigation Deposit**. In the event that any claim, action, or proceeding as described above is filed against the County, the Permittee shall within ten days of the filing make an initial deposit with LA County Planning in the amount of up to $5,000.00, from which actual costs and expenses shall be billed and deducted for the purpose of defraying the costs or expenses involved in LA County Planning's cooperation in the defense, including but not limited to, depositions, testimony, and other assistance provided to Permittee or Permittee's counsel.

If during the litigation process, actual costs or expenses incurred reach 80 percent of the amount on deposit, the Permittee shall deposit additional funds sufficient to bring the balance up to the amount of $5,000.00. There is no limit to the number of supplemental deposits that may be required prior to completion of the litigation.

At the sole discretion of the Permittee, the amount of an initial or any supplemental deposit may exceed the minimum amounts defined herein. Additionally, the cost for collection and duplication of records and other related documents shall be paid by the Permittee according to County Code Section 2.170.010 (Fees for Providing County Records).

6. **Invalidation**. If any material provision of this grant is held or declared to be invalid by a court of competent jurisdiction, the permit shall be void and the privileges granted hereunder shall lapse.

7. **Recordation**. Prior to the use of this grant, the Permittee, or the owner of the subject property if other than the Permittee, shall **record the terms and conditions** of the grant in the office of the County Registrar-Recorder/County Clerk (i.e. Recorder's Office). In addition, upon any transfer or lease of the property during the term of this grant, the Permittee, or the owner of the subject property if other than the Permittee, shall promptly provide a copy of the grant and its conditions to the transferee or lessee of the subject property.

8. **Grant Term. This grant shall terminate on January 20, 2031**. Entitlement to use of the property thereafter shall be subject to the regulations then in effect. If the Permittee intends to continue operations after such date, whether or not the Permittee proposes any modifications to the use at that time, the Permittee shall file a new Conditional Use Permit application with LA County Planning, or shall otherwise comply with the applicable requirements at that time. Such application shall be filed at least twelve months prior to the expiration date of this grant and shall be accompanied by the required fee. In the event that the Permittee seeks to discontinue or otherwise change the use, notice is hereby given that the use of such property may require additional or different permits and would be subject to the then-applicable regulations.

9. **Expiration**. This grant shall expire unless used within ninety (90) days from the date of decision for this grant. A single thirty (30) day time extension may be requested in writing and with the payment of the applicable fee prior to such expiration date. For the purposes of this provision, continued sale of beer and wine and satisfaction of Condition No. 2 shall be considered use of this grant.

10. **Inspections**. The subject property shall be maintained and operated in full compliance with the conditions of this grant and any law, statute, ordinance, or other regulation applicable to any development or activity on the subject property. Failure of the Permittee to cease any development or activity not in full compliance shall be a violation of these conditions. No provision of any easement of or any other encumbrance on the property shall exempt the Permittee and/or property owner from compliance with these conditions and applicable regulations. Inspections shall be

made to ensure compliance with the conditions of this grant as well as to ensure that any development undertaken on the subject property is in accordance with the approved site plan on file. The Permittee shall deposit with the County the sum **$4,560.00,** which shall be placed in a performance fund and be used exclusively to reimburse LA County Planning for all expenses incurred while inspecting the premises to determine the Permittee's compliance with the conditions of this grant. The fund provides for **ten (10)** inspections.

Inspections may be unannounced. Inspections may be conducted utilizing any available technologies, including, but not limited to, unmanned aircraft systems (UAS). Use of a UAS requires the consent of the Permittee pursuant to LA County Planning's UAS policy, which may be updated from time to time, and which shall be provided to the Permittee upon request.

If additional inspections are required to ensure compliance with the conditions of this grant, or if any inspection discloses that the subject property is being used in violation of any one of the conditions of this grant, the Permittee shall be financially responsible and shall reimburse LA County Planning for all additional enforcement efforts necessary to bring the subject property into compliance. The amount charged for additional inspections shall be **$456.00** per inspection, or the current recovery cost established by LA County Planning at the time any additional inspections are required, whichever is greater.

11. **Revocation**. Notice is hereby given that any person violating a provision of this grant is guilty of a misdemeanor. Notice is further given that the Regional Planning Commission ("Commission") or a Hearing Officer may, after conducting a public hearing, revoke or modify this grant, if the Commission or Hearing Officer finds that these conditions have been violated or that this grant has been exercised so as to be detrimental to the public's health or safety or so as to be a nuisance, or as otherwise authorized pursuant to County Code Chapter 22.238 (Modifications and Revocations). Failure of the Permittee to cease any development or activity not in full compliance shall be a violation of these conditions and may result in revocation.

12. **County Fire Code.** All development pursuant to this grant shall comply with the requirements of Title 32 (Fire Code) of the County Code to the satisfaction of the County Fire Department ("Fire").

13. **County Public Works Requirements**. All development pursuant to this grant shall comply with the requirements of the County Department of Public Works ("Public Works") to the satisfaction of said department.

14. **Exhibit "A."** All development pursuant to this grant shall comply with the requirements of Title 22 (Planning and Zoning) of the County Code and of the specific zoning of the subject property, unless specifically modified by this grant, as set forth in these conditions, including the approved Exhibit "A," or a revised Exhibit "A" approved by the Director of LA County Planning ("Director").

15. **Maintenance.** The Permittee shall maintain the subject property in a neat and orderly fashion. The Permittee shall maintain free of litter all areas of the premises over which the Permittee has control.

16. **Graffiti.** All structures, walls and fences open to public view shall remain free of graffiti or other extraneous markings, drawings, or signage that was not approved by LA County Planning. These shall include any of the above that do not directly relate to the business being operated on the premises or that do not provide pertinent information about said premises. The only exceptions shall be seasonal decorations or signage provided under the auspices of a civic or non-profit organization.

    In the event of graffiti or other extraneous markings occurring, the Permittee shall remove or cover said markings, drawings, or signage within 48 hours, weather permitting. Paint utilized in covering such markings shall be of a color that matches, as closely as possible, the color of the adjacent surfaces.

17. **Conditions of Approval Maintained on the Premises.** The conditions of this grant shall always be retained on the premises and shall be immediately produced upon request by any County Sheriff, LA County Planning Zoning Enforcement ("Zoning Enforcement") inspector, or State of California Department of Alcoholic Beverage Control ("ABC") agent. The manager and all employees of the facility shall be knowledgeable of the conditions herein. Violation of the conditions herein may subject the use to the provisions of County Code Chapter 22.238 (Modifications and Revocations).

PERMIT-SPECIFIC CONDITIONS (SALE OF ALCOHOLIC BEVERAGES FOR ON-SITE CONSUMPTION)

18. **Loitering Restrictions and Enforcement.** Loitering, including loitering by employees of the subject property, shall be prohibited on or within the immediate vicinity of the subject property, including adjacent public and private parking lots, public sidewalks, alleys, and other public rights-of-way. Within 60 days of Date of Final Approval of this CUP, signage in compliance with County Code Chapter 22.114 (Signs) shall be placed on the exterior of the premises indicating said prohibition. Employees shall be instructed to enforce these regulations and to call local law enforcement if necessary. If loitering occurs on a continuous basis, as determined by the Sheriff, a security guard shall be required during business hours at the discretion of the Director.

19. **Employee Alcohol Training Requirements.** All employees who directly serve or are in the practice of selling alcoholic beverages, including managers, shall participate in the LEAD (Licensee Education on Alcohol and Drugs) Program provided by ABC, or a similar program, such as STAR (Standardized Training for Alcohol Retailers) or another comparable State of California-certified program. All new designated employees shall be required to attend. The licensee shall display a certificate or plaque in a publicly accessible area of the establishment, such as the lobby, indicating they have participated in this program. Proof of completion of the facility's training program by employees, the licensee, and all managers shall be provided to Zoning Enforcement within 90 days of the effective date of this

Conditional Use Permit, and subsequently within 90 days of the hire date of all new employees and/or managers.

20. **Prohibition of Alcohol Sales to Intoxicated Persons.** The permittee and all managers and employees shall not allow the sale of alcoholic beverages to any intoxicated person, any person appearing to be intoxicated, or any person exhibiting behaviors associated with being intoxicated.

21. **Restrictions on Alcohol Advertising.** The permittee shall not advertise the sale of alcoholic beverages on the exterior of any structure on the subject property, including windows, walls, fences, poles, or similar structures, or within any portion of the interior of any structure that is visible from the outside.

22. **Age Requirement for Alcohol Sales.** Alcoholic beverages shall only be sold or served to patrons age 21 or older.

23. **Posting of Law Enforcement and Transportation Contacts.** The permittee shall post the telephone numbers of local law enforcement agencies and shall post the telephone numbers of taxicab companies or a sign promoting ridesharing options, at or near the cashier or within a similar public service area. Such telephone numbers shall be visible by, and available to, the public.

24. **Exterior Lighting Standards and Compliance.** Within 60 days of the Date of Final Approval, the permittee shall provide adequate exterior lighting above all entrances and exits to the premises and in all public and private parking lots and walkways under control of the permittee or required as a condition of this grant. All exterior lighting required by this grant shall be of sufficient power to illuminate and make easily discernable the appearance and conduct of all persons within lighted areas during operating hours and shall be designed to direct light and glare only onto the premises. All exterior lighting by this grant shall also be hooded and directed away from neighboring residences to prevent direct illumination and glare, and shall be turned off within thirty minutes after conclusion of activities, except for sensor-activated security lights and/or low level lighting along all pedestrian walkways leading to and from public and private parking lots.

25. **Address Signage Requirements.** Within 60 days of the Date of Final Approval, the permittee shall install a numbering/lettering address sign, in compliance with County Code Chapter 22.114 (Signs), shall be located at the front of the building in a location clearly visible from the property grounds and the nearest public street, to the satisfaction of the Director.

26. **Prohibition of Exterior Security Bars and Roll-Up Doors.** Exterior security bars and roll-up doors applied to windows and pedestrian building entrances shall be prohibited.

27. **Property Maintenance and Cleanliness Standards.** The premises, including exterior facades and other areas under control of the permittee, shall be maintained in a neat and orderly condition and be free of garbage, trash, debris, or junk and

salvage, except in designated trash collection containers and enclosures. All garbage, trash, debris, or junk and salvage shall be collected, and disposed of, daily.

28. **Noise and Music Compliance Requirements.** Music or other audible noise at the premises shall comply with Title 12 (Environmental Protection) of the County Code to the satisfaction of the County Department of Public Health.

PROJECT SITE-SPECIFIC CONDITIONS

29. **Scope of Approval.** This grant shall authorize the sale of beer and wine for on-site consumption at an existing restaurant.

30. **Authorized Hours for Alcohol Sales.** The sales of beer and wine for on-site consumption in conjunction with the existing restaurant shall be permitted daily from 10:00 AM up to 30 minutes prior to the close of business or until 10:00 PM, whichever is earlier.

31. **Employee Age Requirements for Serving Alcohol.** Employees age 18 or older may serve alcoholic beverages in an area primarily designed and used for the sale and service of food for consumption on the premises as an incidental part of their overall duties.

32. **Alcohol Sales Restricted to Food Orders.** Alcoholic beverages shall be sold to customers only when food is ordered and consumed within the subject restaurant premises only.

33. **Requirement to Employ Full-Time Cook.** The business shall employ not less than one full-time cook that is engaged in the preparation of meals for patrons during the hours of operation.

34. **Continuous Food Service During Operating Hours.** Food service shall be continuously provided during operating hours.

35. **Surveillance Recording.** The permittee shall continuously maintain active and functional surveillance recording equipment which captures video recordings inside the restaurant, outside facing parking lots, public sidewalks, alleys, and other public rights-of-way on a continuous loop. Recordings shall be retained for a minimum of 30 days and shall be immediately produced upon request by the Sheriff, Zoning Enforcement, or any law enforcement.

36. **Restrictions on Outdoor Alcohol Consumption.** The sale of alcoholic beverages for consumption outside of the enclosed structure of the restaurant shall be prohibited. The permittee shall instruct all designated employees, who directly serve or are in the practice of selling alcoholic beverages, regarding this restriction. Employees shall be instructed to enforce such restrictions and to call local law enforcement as necessary.

37. **Window Signs.** Temporary window signs shall not exceed 25 percent of the area of any single window or of adjoining windows on the same frontage.

38. **Portable Signs.** The placement of portable signs on sidewalks adjacent to the subject property and temporary signs on walls and poles shall be prohibited.

39. **ABC License.** The permittee shall maintain a valid license issued by ABC.

40. **Prohibition of Live Entertainment and Dancing.** No live entertainment (including karaoke), dancing, or dance floor is authorized in or outside the premises.

41. **Required Parking Spaces.** A minimum of 37 parking spaces shall be provided at the Project Site, unless otherwise approved by the Los Angeles County Department of Regional Planning.

42. **Site Plan Review.** Within 60 days of the Date of Final Approval, the permittee shall bring or cause the Project Site to be in compliance with Plot Plans 200900033 and 200601003 or obtain the approval of a Site Plan Review and/or any other necessary required land use entitlements from LA County Planning for any deviations from Plot Plans 200900033 and 200601003.

LA COUNTY PLANNING

CONDITIONAL USE PERMIT STATEMENT OF FINDINGS

Pursuant to County Code Section 22.158.050 (Findings and Decision), the applicant shall substantiate the following:

(Please see Guidelines for Writing Your Conditional Use Permit Findings Statement. Do not repeat the statement or provide Yes/No responses. If necessary, attach additional pages.)

B.1 The proposed use will be consistent with the adopted General Plan for the area.
The project site located within the Commercial land use category of Rowland Heights Community Plan. The proposed project is consistent with the permitted uses of the underlying land use category which is intended for retail commercial, service and office uses.
B.2 The requested use at the location proposed will not: a. Adversely affect the health, peace, comfort, or welfare of persons residing or working in the surrounding area; b. Be materially detrimental to the use, enjoyment, or valuation of property of other persons located in the vicinity of the site; and c. Jeopardize, endanger, or otherwise constitute a menace to the public health, safety, or general welfare.
This proposed project location and orientation of the proposed use within the interior of the commercial center ensures that the use will not create a nuisance to the surrounding residences. The proposed project conditions regarding the operation of the facility reduce the likelihood that the project will negatively affect the persons residing in the neighboring residences.
B.3 The proposed site is adequate in size and shape to accommodate the yards, walls, fences, parking and loading facilities, landscaping, and other development features prescribed in this Title 22, or as is otherwise required in order to integrate said use with the uses in the surrounding area.
The existing commercial center was constructed in compliance of the development standards in the County Zoning Code.

B.4 The proposed site is adequately served: a. By highways or streets of sufficient width, and improved as necessary to carry the kind and quantity of traffic such use would generate; and b. By other public or private service facilities as are required.
Our site just south of 60 freeway, with traffic lights after off the ramp. The site is from Colima Road, Nogales Street and Daisetta Street, the streets are sufficient to accommodate anticipated vehicular traffic.

LA COUNTY PLANNING

ALCOHOLIC BEVERAGE SALES STATEMENT OF FINDINGS

In addition to the Conditional Use Permit Findings required pursuant to County Code Section 22.158.050 (Findings and Decision), pursuant to County Code Section 22.140.030 (Alcoholic Beverage Sales), the applicant shall substantiate the following:

(Do not repeat the statement or provide Yes/No responses. If necessary, attach additional pages.)

ABC License Type Requested(s).: Type 47 (e.g. Type 20, Type 41)

F.1.a. The requested use at the proposed location will not adversely affect the use of a place used exclusively for religious worship, school, park, playground, or any similar use within a 600-foot radius.
The proposed project is not located within a 600-foot radius of any identified sensitive uses, which means a place used exclusively for religious worship, school, park, playground, or any similar use.

F.1.b. The requested use at the proposed location is sufficiently buffered in relation to any residential area within the immediate vicinity, so as not to adversely affect said area.
There is no tenant spaces oriented toward the western property boundary, facing the mobile home community.

F.1.c. The requested use at the proposed location will not adversely affect the economic welfare of the nearby community.
The proposed sale of alcoholic beverages is common ancillary service to restaurant business.

F.1.d. The exterior appearance of the structure will not be inconsistent with the exterior appearance of commercial structures already constructed or under construction within the immediate neighborhood, so as to cause blight, deterioration, or substantially diminish or impair property values within the neighborhood.
There is no proposed work to be done on the exterior of the structure.

Additional findings of public convenience or necessity.
Findings of public convenience or necessity, in accordance with County Code Section 22.140.030.F.2.a, shall be made when:

i. The requested use is located in a high crime reporting district or in an area of undue concentration, pursuant to the California Alcoholic Beverage Control Act and the regulations adopted under that Act; or
ii. A use selling alcoholic beverages for off-site consumption is proposed within a 500-foot radius of another use selling alcoholic beverages for off-site consumption.

Findings of public convenience or necessity shall be based upon review and consideration of relevant factors, which shall include, in accordance with Section 22.140.030.F.2.b, but not be limited to, the following, as applicable:

i. The extent to which the requested use would duplicate services and, therefore, contribute to an over-concentration of similar uses.
ii. The extent to which alcoholic beverage sales are related to the function of the requested use, and the possibility of the use operating in a viable manner without alcohol sales.
iii. The extent to which the requested use will enhance the economic viability of the area.
iv. The extent to which the requested use will enhance recreational or entertainment opportunities in the area.
v. The extent to which the requested use compliments the established or proposed businesses within a specific area.
vi. The ability of the requested use to serve a portion of the market not served by other uses in the area.
vii. The convenience of purchasing alcoholic beverages at the requested use in conjunction with other specialty food sales or services.
viii. The aesthetic character and ambiance of the requested use.
ix. The extent to which the requested use, location, and/or operator has a history of law enforcement problems.

The extent to which the requested use will enhance recreational or entertainment opportunities in the area. The sale of alcoholic beverages at the restaurant would serve as a public convenience and necessity to the surrounding community by providing services that are consistent with other restaurant in the area.

Additional findings for a modification request to the shelf space limitations.
For a request to modify the shelf space limitation pursuant to County Code Section 22.140.030.E.1, the applicant shall address at least one of the findings, in accordance with County Code Section 22.140.030.F.3.b, below:

i. The requested use is not located in a high crime reporting district, as described in the California Alcoholic Beverage Control Act and the regulations adopted under that Act;
ii. The requested use is a specialty retailer with a unique product mix that requires a greater allocation of shelf space to alcoholic beverages than would be the case for a general purpose retailer; or
iii. The requested use involves the relocation of a use that was not previously subject to the alcoholic beverage shelf space limitation provided in Section 22.140.030.E.1, above, and the new location will allocate less shelf space to alcoholic beverages than was the case at the previous location.

The requested use involves the relocation of a use that was not previously subject to the alcoholic beverages shelf space limitation provided in Section 22.140.030.E.1., above, and the new location will allocate less shelf space to alcoholic beverages than was the case a the previous location.

Additional findings for a modification request to requirement to carry a minimum of three varieties of fresh produce.
For a request to modify the requirement to carry a minimum of three varieties of fresh produce pursuant to County Code Section 22.140.030.E.2, the applicant shall address the findings, in accordance with County Code Section 22.140.030.F.3.b, below:

i. The requested use is not a general purpose retailer and is located in an area with sufficient access to fresh produce and whole grains.
The requested use is not general propose retailer and is located in an area with sufficient access to fresh produce and whole grains.

PROPOSED ENVIRONMENTAL DETERMINATION

DETERMINATION DATE:	December 18, 2025
PROJECT NUMBER:	PRJ2024-002530-(1)
PERMIT NUMBER(S):	Conditional Use Permit RPPL2024003803
SUPERVISORIAL DISTRICT:	1
PROJECT LOCATION:	18958 Daisetta Street Suite 106, Rowland Heights
OWNER:	New World RTC I LP
APPLICANT:	Chengkui Yu / Late Night Bar
CASE PLANNER:	Carl Nadela, AICP, Principal Regional Planner cnadela@planning.lacounty.gov

Los Angeles County ("County") completed an initial review for the above-mentioned Project. Based on examination of the project proposal and the supporting information included in the application, the County proposes that an Exemption is the appropriate environmental documentation under the California Environmental Quality Act ("CEQA"). The project qualifies as a Class 1 Existing Facilities categorical exemption under State CEQA Guidelines Section 15301. The Project is exempt because it is for the continued accessory sale of beer and wine for on-site consumption at an existing restaurant located within an existing commercial complex. No modifications or physical development are proposed.

No exceptions to the categorical exemption apply to the Project per Section 15300.2 of the California Code of Regulations. The Project Site is not located within or in close proximity to a historical resource, a hazardous waste site, or a scenic highway. No significant effect due to "unusual circumstances" and no cumulative impacts are anticipated.

AERIAL IMAGERY

SITE-SPECIFIC MAP

PROJECT NO. PRJ2024-002530
ALCOHOL CUP RPPL2024003803

Digital Ortho Aerial Imagery:
Los Angeles Region Imagery Acquisition Consortium (LARIAC)
2024

Feet
0 100 200

N

LA COUNTY PLANNING

LOS ANGELES COUNTY
Dept. of Regional Planning
320 W. Temple Street
Los Angeles, CA 90012

HALF-MILE RADIUS

LOCATOR MAP

PROJECT NO. PRJ2024-002530

ALCOHOL CUP RPPL2024003803

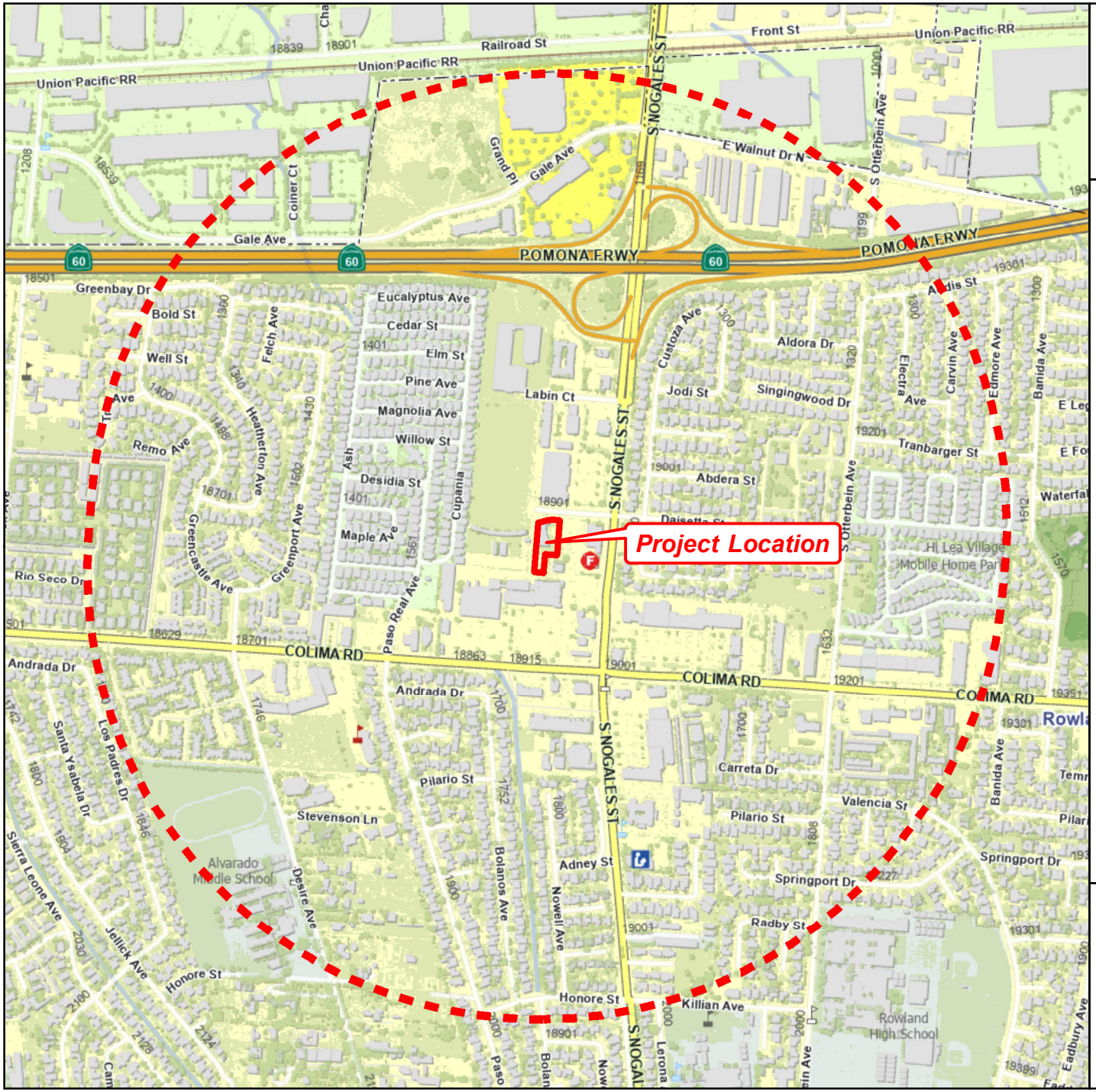

Feet

0 600 1,200

N

LA COUNTY PLANNING

LOS ANGELES COUNTY
Dept. of Regional Planning
320 W. Temple Street
Los Angeles, CA 90012

3-MILE RADIUS
LOCATOR MAP
PROJECT NO. PRJ2024-002530
ALCOHOL CUP RPPL2024003803

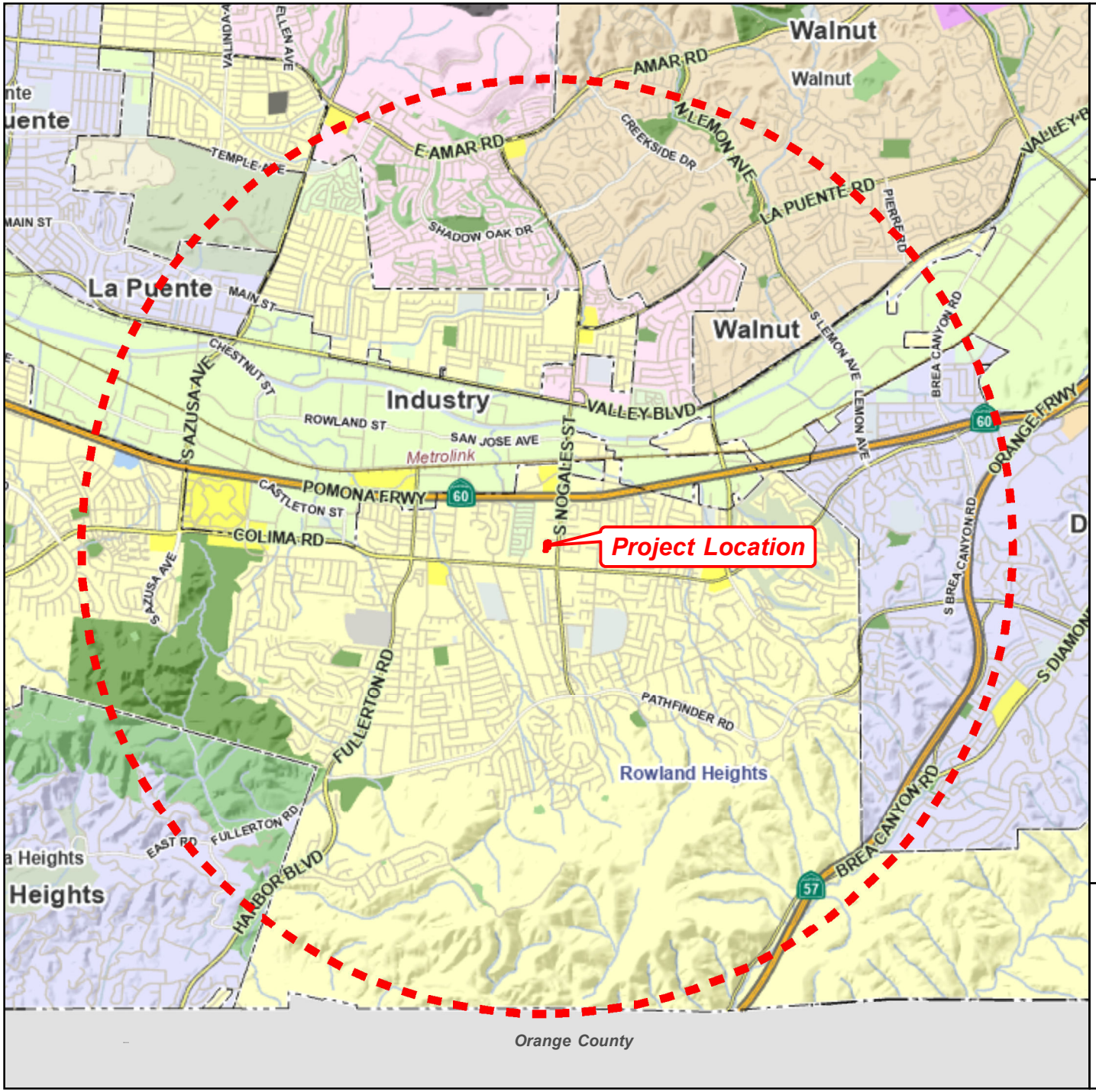

Feet

0 4,000 8,000

N

LA COUNTY PLANNING

LOS ANGELES COUNTY
Dept. of Regional Planning
320 W. Temple Street
Los Angeles, CA 90012

20-MILE RADIUS

LOCATOR MAP

PROJECT NO. PRJ2024-002530

ALCOHOL CUP RPPL2024003803

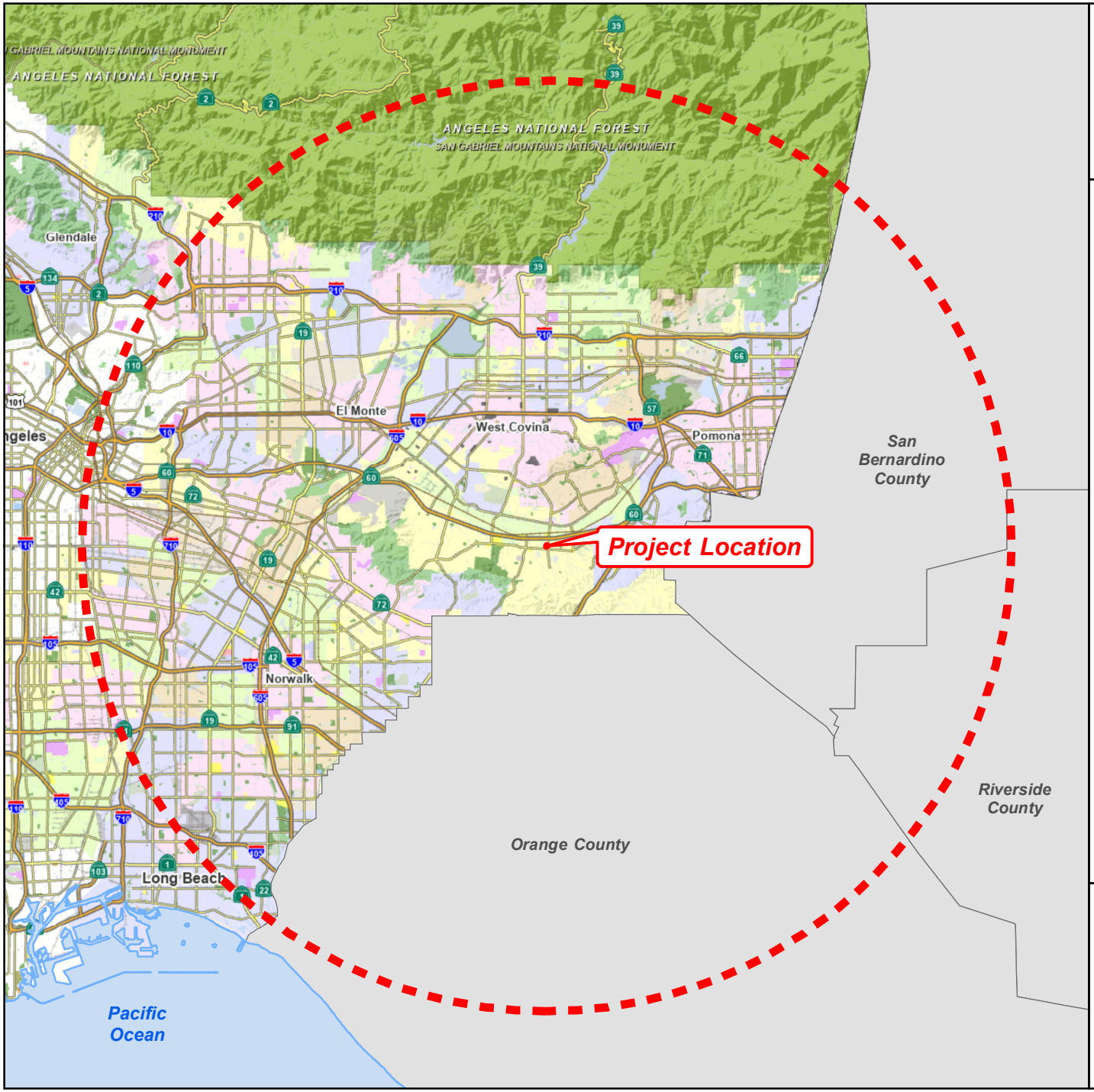

Miles

0 5 10

N

LA COUNTY PLANNING

LOS ANGELES COUNTY
Dept. of Regional Planning
320 W. Temple Street
Los Angeles, CA 90012

EXHIBIT H

Photographs for PRJ2024-002530-(1) Conditional Use Permit RPPL2024003803

View of Subject Property from the Southeast

View of Subject Property from the Northeast

View of Subject Property from the Northwest

Department of Alcoholic Beverage Control

State of California
Gavin Newsom, Governor

INFORMATION AND INSTRUCTIONS - SECTION 23958.4 B&P

Instructions

- This form is to be used for all applications for original issuance or premises to premises transfer of licenses.
- Part 1 is to be completed by an ABC employee, given to applicant with pre-application package, with copy retained in holding file or applicant's district file.
- Part 2 is to be completed by the applicant, and returned to ABC.
- Part 3 is to be completed by the local governing body or its designated subordinate officer or body, and returned to ABC.

PART 1 - TO BE COMPLETED BY ABC

1. APPLICANT'S NAME

2. PREMISES ADDRESS (Street number and name, city, zip code)
18958 Daisetta st, Ste 106, Rowland Heights (CA) 91748-2278

3. LICENSE TYPE
41

4. TYPE OF BUSINESS

✓ Full Service Restaurant	Hofbrau/Cafeteria	Cocktail Lounge	Private Club
Deli or Specialty Restaurant	Comedy Club	Night Club	Veterans Club
Cafe/Coffee Shop	Brew Pub	Tavern: Beer	Fraternal Club
Bed & Breakfast:	Theater	Tavern: Beer & Wine	Wine Tasting Room
Wine only / All			
Supermarket	Membership Store	Service Station	Swap Meet/Flea Market
Liquor Store	Department Store	Convenience Market	Drive-in Dairy
Drug/Variety Store	Florist/Gift Shop	Convenience Market w/Gasoline	
Other - describe:			

5. COUNTY POPULATION	6. TOTAL NUMBER OF LICENSES IN COUNTY	7. RATIO OF LICENSES TO POPULATION IN COUNTY
N/A	N/A On-Sale Off-Sale	1: 899 ✓ On-Sale Off-Sale
8. CENSUS TRACT NUMBER	**9. NO. OF LICENSES ALLOWED IN CENSUS TRACT**	**10. NO. OF LICENSES EXISTING IN CENSUS TRACT**
4082.13	6 ✓ On-Sale Off-Sale	32 ✓ On-Sale Off-Sale

11. IS THE ABOVE CENSUS TRACT OVERCONCENTRATED WITH LICENSES? (i.e., does the ratio of licenses to population in the census tract exceed the ratio of licenses to population for the entire county?)

✓ Yes, the number of existing licenses exceeds the number allowed

No, the number of existing licenses is lower than the number allowed

679-B4

12. DOES LAW ENFORCEMENT AGENCY MAINTAIN CRIME STATISTICS?

✓ Yes (Go to Item #13) No (Go to Item #20)

Walnut SS

13. CRIME REPORTING DISTRICT NUMBER	14. TOTAL NUMBER OF REPORTING DISTRICTS	15. TOTAL NUMBER OF OFFENSES IN ALL REPORTING DISTRICTS
2931	572	43,839
16. AVERAGE NO. OF OFFENSES PER DISTRICT	**17. 120% OF AVERAGE NUMBER OF OFFENSES**	**18. TOTAL NUMBER OF OFFENSES IN REPORTING DISTRICT**
76.6	91.9	378

19. IS THE PREMISES LOCATED IN A HIGH CRIME REPORTING DISTRICT? (i.e., has a 20% greater number of reported crimes than the average number of reported crimes as determined from all crime reporting districts within the jurisdiction of the local law enforcement agency)

✓ Yes, the total number of offenses in the reporting district equals or exceeds the total number in item #17

No, the total number of offenses in the reporting district is lower than the total number in item #17

20. CHECK THE BOX THAT APPLIES (check only one box)

a. If "*No*" is checked in both item #11 *and* item #19, *Section 23958.4 B&P does not apply* to this application, and no additional information will be needed on this issue. Advise the applicant to bring this completed form to ABC when filing the application.

✓ b. If "*Yes*" is checked in either item #11 *or* item #19, *and* the applicant is applying for a non-retail license, a retail bona fide public eating place license, a retail license issued for a hotel, motel or other lodging establishment as defined in Section 25503.16(b) B&P, or a retail license issued in conjuction with a beer manufacturer's license, or winegrower's license, advise the *applicant to complete Section 2* and bring the completed form to ABC when filing the application or as soon as possible thereafter.

c. If "*Yes*" is checked in either item #11 *or* item #19, *and* the applicant is applying for an off-sale beer and wine license, an off-sale general license, an on-sale beer license, an on-sale beer and wine (public premises) license, an on-sale general (public premises) license, or an on-sale general music venue license, advise the *applicant to take this form to the local governing body, or its designated subordinate officer or body to have them complete Section 3*. The completed form will need to be provided to ABC in order to process the application.

Governing Body/Designated Subordinate Name:

FOR DEPARTMENT USE ONLY

PREPARED BY (Name of Department Employee)

02/11/25

OFFICE OF THE SHERIFF

COUNTY OF LOS ANGELES

HALL OF JUSTICE

ROBERT G. LUNA, SHERIFF

Subject:	Conditional Use Permit (CUP) Consultation for Sale of Alcohol
Project No.:	PRJ2024-002530-(1)
Permit No.:	CUP RPPL2024003803
Establishment:	Late Night Bar
Location:	18958 Daisetta Street Suite 106, Rowland Heights, CA 91748
Description:	To upgrade existing beer and wine license to a full line of alcohol for on-site consumption at the existing restaurant with new live entertainment (karaoke).

(1) Summary of service calls and crime history for the project site over the last five years:

Over the past 5 years there have been several calls for service at the address Three story building). There was a marijuana dispensary the had numerous incidents near the Late Night Bar. The dispensary was closed in 2023, unknown if one has reopened in the complex.

Calls in the complex were: 4- brandishing a firearm, 2- thefts, 4- transients loitering, and 1 disturbance.

Calls dispatched regarding the late Night Bar only:
5 – assault with a deadly weapon call, 2- drunk and disorderly, 1 -burglary, 2 thefts, 2- disturbance calls.

(2) Comments/recommended conditions:

The location has more than a reasonable number of calls for service. Many of the calls for service are of a violent nature. At this time, we feel the location is experiencing criminal activity and we do not believe it will improve. The location has had several incidents with the current CUP alcohol license it possesses. We do not recommend any additional licensing be granted.

(3) Overall recommendation:

☐ Sheriff recommends approval of this CUP.

☒ Sheriff does **NOT** recommend approval of this CUP.

Sincerely,

ROBERT G. LUNA, SHERIFF

Steven H. Tousey, Captain
Walnut/Diamond Bar Sheriff's Station

ROWLAND HEIGHTS
COMMUNITY COORDINATING COUNCIL

WWW.ROWLAND-HEIGHTS.ORG

P.O. Box 8171
Rowland Heights
California 91748

Email:
rhccc4RH@gmail.com

President:
Yvette Romo

Vice Presidents:
Brandon Macias
Maria Kramer
Kim De la Peza

Recording Secretary:
Denise Jackman

Treasurer
Linda Kuo

Corresponding
Secretary:
Synde Edwards

09/30/2025

Regional Planning Commission
County of Los Angeles
320 West Temple Street
Los Angeles, CA. 90012

Attn: Mr. Carl Nadela
(Principal Regional Planner, Puente Whittier Development Services)

RE: #RPPL202400380 Late Night Bar located 18958 Daisetta St. #106 Rowland Heights, CA. 91748

Mr. Nadela:

Rowland Heights Community Coordinating Council **OPPOSES** the CUP application. The RHCCC after much consideration does **Oppose** the CUP application renewal of Late Night Bar located at 18958 Daisetta St. #106 Rowland Heights, CA. 91748. The sale of Full line of alcohol. They currently sell beer and wine and have had 4 calls for disorderly conduct this year by the LA County Sheriff's dept. We as a Board believe increasing to full line of alcohol is not in the best interest of the Rowland Heights Community

Thank you for allowing us to consider this permit.

Sincerely,
Rowland Heights Community Coordinating Council
Yvette Romo-President
Rowland Heights Community Coordinating Council
626-253-7446
P.O. Box 8171
Rowland Heights, CA. 91748

Los Angeles County
Department of Regional Planning

Planning for the Challenges Ahead

Richard J. Bruckner
Director

July 7, 2010

CERTIFIED MAIL - RETURN RECEIPT REQUESTED

Ms. Chien Chang
1701 W. Cedar St. #9
Alhambra, CA 91801

PROJECT NUMBER R2006-01756: CONDITIONAL USE PERMIT 200900119
18958 DAISETTA ST., ROWLAND HEIGHTS

Dear Applicant:

The Regional Planning Commission, by its action of July 7, 2010, **APPROVED** Conditional Use Permit No. 200900119. The attached documents contain the Regional Planning Commission's findings and conditions relating to the approval. Please carefully review each condition. Condition No. 3 requires that the permittee file an Affidavit accepting the conditions before the grants becomes effective.

The applicant or and other interested person may appeal the Regional Planning Commission's decision to the Board of Supervisors. To appeal, contact Sachi A. Hamai, Executive Officer, Room 383, Kenneth Hahn Hall of Administration, 500 W. Temple St., Los Angeles, CA 90012, (213) 974-1426. **The appeal period ends at 5:00 p.m. on July 21, 2010.** An appeal must be delivered in person to the Executive Office by this time. If no appeal is filed during the specified period, the Regional Planning Commission action is final. If an appeal is received, the applicant will be notified.

Upon expiration of the appeal period, please notarize the attached acceptance forms and hand deliver this form and any other required fees or materials to the planner assigned to your case. Please make an appointment with the case planner to assure that processing will be completed expeditiously.

For further information on appeal procedures or any other matter pertaining to these approvals, please contact Phillip Estes at (213) 974-6435 or e-mail at pestes@planning.lacounty.gov. Office hours are Monday through Thursday, 7:30 a.m. to 5:30 p.m. Regional Planning offices are closed on Fridays.

Sincerely,

DEPARTMENT OF REGIONAL PLANNING
Richard J. Bruckner
Director

Maria Masis pe

Maria Masis, AICP, Supervising Regional Planner
Zoning Permits II Section

Enclosures: Findings and Conditions, Affidavit (Permittee's Completion)
CC: BOS, Zoning Enforcement, ABC, Testifiers, Sheriff
Hearing Footage: Item #6
MM:PE

FINDINGS AND ORDER OF THE REGIONAL PLANNING COMMISSION
COUNTY OF LOS ANGELES

PROJECT NO.: R2006-01756-(1)

CONDITIONAL USE PERMIT NO.: 200900119

REQUEST: To authorize the sale of alcoholic beverages (beer, wine and distilled spirts) for on-site consumption in the C-3-BE (Unlimited Commercial – Billboard Exclusion) zone, Puente Zoned District at a previously approved restaurant within an existing shopping center.

HEARING DATE: July 7, 2010.

PROCEEDINGS BEFORE THE REGIONAL PLANNING COMMISSION:
July 7, 2010 Public Hearing
A duly noticed public hearing was held on July 7, 2010 before the Regional Planning Commission. Chairman Rew, Commissioner Bellamy and Commissioner Modugno were present.

Phillip Estes, Principal Regional Planner, gave a brief staff presentation of the proposed project and applicant's request. The restaurant was approved by Plot Plan 200900033 in 2009. Staff testified that the request was to authorize the sale of beer, wine and distilled spirits for on-site consumption at the restaurant approved by Plot Plan 200900033. Mr. Estes stated that the project is located within an existing multi-tenant commercial center located at the intersection of Nogales St. and Colima Rd. Mr. Estes further testified that the applicant's request would not adversely affect the health, peace, comfort or welfare of the people in the surrounding area, and that the applicant had satisfied the required Burden of Proof.

The applicant's representative, Ms. Chien Chang, was present and stated she had reviewed and the applicant agreed to the draft conditions of approval.

A member of the public, Ms. Lynne Ebenkamp, was present and testified. Mrs. Ebenkamp raised concerns related to traffic conditions and traffic signalization in the vicinity of the project. Public Works staff indicated no concerns related to this specific request.

The Commission, hearing no further testimony, closed the public hearing and unanimously approved Conditional Use Permit 200900119, subject to the conditions presented by staff.

Findings

1. The subject property is located at 18958 Daisetta St., Rowland Heights, Puente Zoned District.

2. The applicant requested a conditional use permit to authorize the sale of alcoholic beverages (beer, wine and distilled spirits) for on-site consumption in association with a previously approved restaurant within an existing shopping center ("Project").

3. The subject property is located in the C-3-BE (Unlimited Commercial – Billboard Exclusion) zone. Restaurants are a permitted use in this zone.

4. The subject property is located in the Rowland Heights Community Standards District. It is in substantial compliance with development standards.

5. The Assessor's parcel number is 8761-011-014.

6. The existing restaurant was authorized by Plot Plan No. 200900033 on April 16, 2009.

7. The subject property is in substantial compliance with the approved Plot Plan No. 200900033. It is adequate in size and shape to accommodate the yards, walls, fences, parking and loading facilities, landscaping and other development features prescribed in the zoning ordinance.

8. No new exterior construction is proposed.

9. Access to the site is from Colima Road, Nogales Street and Daisetta Street. The streets are sufficient to accommodate anticipated vehicular traffic.

10. Staff has received no comments from the public.

11. The Rowland Heights Community Coordinating Council does not oppose this project.

12. The Sheriff Dept. (Walnut/Diamond Bar Station) has indicated no objection to this project.

13. The subject property is located in the C – Commercial category of the Rowland Heights Community Plan.

14. The project is Categorically Exempt Class 1 (Existing Facilities) under the California Environmental Quality Act (CEQA) reporting requirements.

15. Pursuant to the provisions of Sections 22.60.174 and 22.60.175 of the County Code, the community was appropriately notified of the public hearing by mail, newspaper and property posting.

16. The Project is consistent with the goals and policies of the C – Commercial category of the Rowland Heights Community Plan. The Commercial category encourages community commercial uses, such as restaurants.

17. The proposal is consistent with and supports the surrounding commercial district. The proposal does not conflict with the goals and policies of the Santa Clarita Valley Area plan or existing surrounding land uses.

18. Surrounding properties are located in the following zones:
    North: C-3-BE (Unlimited Commercial – Billboard Exclusion)
    South: C-3-BE (Unlimited Commercial – Billboard Exclusion)
    East: C-3-BE (Unlimited Commercial – Billboard Exclusion), A-1-6,000 (Light Agricultural)
    West: C-3-BE (Unlimited Commercial – Billboard Exclusion), A-1-6,000 (Light Agricultural)

19. Surrounding land uses within 500 ft. include:
    North: Commercial, retail, golf driving range
    South: Residential, retail

East: Residential, retail
West: Mobile home park, commercial

20. As shown on the land use map submitted by the applicant, there are no religious facilities, public schools, parks or playgrounds or other similar uses located within a 600-foot radius of the project site.

21. The project, at the proposed location, is sufficiently buffered in relation to any residential area within the immediate vicinity. It is located within an existing shopping center. The project is separated from the nearest residential uses by parking areas and intervening commercial structures. As such, the proposed use is buffered so as not to adversely affect the nearby residential areas.

22. The project will not adversely affect the economic welfare, quality of life or standard of living of the surrounding community. Restaurants with the sale of alcoholic beverages are customary and consistent with a commercial shopping area.

23. The proposed use is located within a commercial area and an existing shopping center. The sale of alcoholic beverages will take place in conjunction with the operation of a sit-down restaurant. It is reasonable and customary for restaurants to offer alcoholic beverages to patrons. Permitting alcoholic beverage sales, in conjunction with the operation of the previously approved restaurant, is consistent with the character of the surrounding commercial area and is consistent with the operation of other surrounding businesses. Permitting the sale of alcoholic beverages in connection with the operation of this restaurant, therefore, serves the public convenience and necessity by providing the type of service that is customarily associated with sit-down restaurants. The public convenience and necessity for an additional facility selling alcoholic beverages for on-site consumption, outweighs the fact that it is located within a 500-foot radius of other facilities selling alcoholic beverages for either on-site or off-site consumption.

24. The project proposes a service—the sale of alcoholic beverages—that is customarily associated with the operation of a restaurant. Allowing the previously approved restaurant to offer alcohol sales, in conjunction with its dining service, will enable the applicant to provide the type of service that is customarily associated with sit-down restaurants. The project will help ensure the economic viability of the restaurant by allowing it to operated in a manner that is consistent with the nature of the surrounding area. The project at the proposed location will not adversely affect the economic welfare of the nearby community.

25. The project does not propose any exterior alteration. The previously approved shopping center was built with applicable standards and requirements. The exterior appearance of the existing structure is consistent with the exterior appearance of existing commercial structures located within the immediate neighborhood. As the project does not propose any exterior alterations, the project will not cause blight, deterioration, or substantially diminish or impair property values within the neighborhood.

26. To assure continued compatibility between the use of the subject property allowed by this grant and surrounding land uses, the Regional Planning Commission has determined that it is necessary to limit the term of the grant to ten years.

27. The location of the documents and other materials constituting the record of proceedings upon which the Commission's decision is based in this matter is at the Los Angeles County Department of Regional Planning, 13th Floor, Hall of Records, 320 W. Temple St., Los Angeles, CA 90012. The custodian of such documents and materials shall be the Los Angeles County Department of Regional Planning.

BASED ON THE FOREGOING, THE REGIONAL PLANNING COMMISSION CONCLUDES:

CONDITIONAL USE PERMIT – Burden of Proof

1. The proposed use is consistent with the adopted general plan for the area;

2. The requested use at the proposed location will not adversely affect the health, peace, comfort, or welfare of persons residing and working in the surrounding areas, and not be materially detrimental to the use, enjoyment, or valuation of property of other persons located in the vicinity of the site, and will not jeopardize, endanger, or otherwise constitute a menace to the public health, safety and general welfare;

3. The proposed site is adequate in size and shape to accommodate the yards, walls, fences, parking, landscaping and other development features;

4. The proposed site is adequately served by highways of sufficient width, and improved as necessary to carry the kind of traffic such use would generate and by other public or private facilities as are required.

THEREFORE, the information submitted by the applicant and presented at the public hearing substantiates the required findings for a conditional use permit as set forth in Sections 22.56.040, 22.56.090, Title 22, of the Los Angeles County Code (Zoning Ordinance).

CONDITIONAL USE PERMIT – Alcoholic Beverage Sales Burden of Proof

1. The requested use at the proposed location will not adversely affect the use of a place used exclusively for religious worship, school, park, playground or any similar use within a 600-foot radius; and

2. The requested use at the proposed location is sufficiently buffered in relation to any residential area within the immediate vicinity so as not to adversely affect said area; and

3. The public convenience or necessity for an additional facility selling alcoholic beverages for on-site consumption, outweighs the fact that it is located within a 500-foot radius of other facilities selling alcoholic beverages for either on-site or off-site consumption; and

4. The requested use at the proposed location will not adversely affect the economic welfare of the nearby community; and

5. The exterior appearance of the structure will not be inconsistent with the exterior appearance of commercial structures already constructed or under construction within the immediate neighborhood so as to cause blight, deterioration, or substantially diminish or impair property values within the neighborhood.

AND, THEREFORE, the information submitted by the applicant and presented at the public hearing substantiates the required findings and burden of proof for a Conditional Use Permit for alcohol sales as set forth in Section 22.56.195 of the Los Angeles County Code (Zoning Ordinance).

REGIONAL PLANNING COMMISSION ACTION:

1. The Regional Planning Commission has considered the Categorical Exemption Class 1 for this project and certifies that it is consistent with the Finding by the State Secretary for Resources and local guidelines that this class of projects does not have a significant effect on the environment.

2. In view of the findings of fact and conclusions presented above, Conditional Use Permit 200900119 is **APPROVED** subject to the attached conditions.

CC: Each Commissioner, Zoning Enforcement, Building and Safety**VOTE**

Concurring: Commissioners Bellamy, Modugno, Rew

Dissenting: None

Abstaining: None

Absent: Commissioners Helsley, Valadez

Action Date: July 7, 2010

MM:PE
7-7-10

This grant authorizes the sale of alcoholic beverages (beer, wine and distilled spirits) for on-site consumption in association with the operation of a previously approved restaurant, subject to the following conditions of approval:

1. Unless otherwise apparent from the context, the term "permittee" shall include the applicant and any other person, corporation or other entity making use of this grant.

2. This grant shall not be effective for any purpose until the permittee, and the owner of the subject property if other than the permittee, have filed at the office of the Department of Regional Planning their affidavit stating that they are aware of and agree to accept all of the conditions of this grant, and that the conditions of the grant have been recorded as required by Condition Number 6, and until all required monies have been paid pursuant to Condition Number 9.

   Notwithstanding the foregoing, this condition No. 2, and Condition Nos. 3, 4, and 8 shall be effective immediately upon final approval of this grant by the County.

3. The permittee shall defend, indemnify and hold harmless the County, its agents, officers, and employees from any claim, action, or proceeding against the County or its agents, officers, or employees to attack, set aside, void or annul this permit approval, which action is brought within the applicable time period of Government Code Section 65009. The County shall promptly notify the permittee of any claim, action, or proceeding and the County shall cooperate fully in the defense. If the County fails to promptly notify the permittee of any claim action or proceeding, or if the County fails to cooperate fully in the defense, the permittee shall not thereafter be responsible to defend, indemnify, or hold harmless the County.

4. In the event that any claim, action, or proceeding as described above is filed against the County, the permittee shall within ten days of the filing pay the Department of Regional Planning an initial deposit of $5,000, from which actual costs shall be billed and deducted for the purpose of defraying the expenses involved in the department's cooperation in the defense, including but not limited to, depositions, testimony, and other assistance to permittee or permittee's counsel. The permittee shall also pay the following supplemental deposits, from which actual costs shall be billed and deducted:

   a. If during the litigation process, actual costs incurred reach 80 percent of the amount on deposit, the permittee shall deposit additional funds sufficient to bring the balance up to the amount of the initial deposit. There is no limit to the number of supplemental deposits that may be required prior to completion of the litigation.

   b. At the sole discretion of the permittee, the amount of an initial or supplemental deposit may exceed the minimum amounts defined herein.

   The cost for collection and duplication of records and other related documents will be paid by the permittee according to Los Angeles County Code Section 2.170.010.

5. If any provision of this grant is held or declared to be invalid, the permit shall be void and the privileges granted hereunder shall lapse.

6. Prior to the use of this grant, the property owner or permittee **shall record the terms and conditions** of the grant in the office of the County Recorder. In addition, upon any transfer or lease of the property during the term of this grant, the property owner or permittee shall promptly provide a copy of the grant and its conditions to the transferee or lessee of the subject property.

7. **This grant will terminate on July 7, 2020.** Entitlement to use of the property thereafter shall be subject to the regulations then in effect. At least six (6) months prior to the expiration of this permit and in the event that the permittee intends to continue operations after such date, a new Conditional Use Permit application shall be filed with the Department of Regional Planning. The application shall be a request for continuance of the use permitted under this grant, whether including or not including modification to the use at that time.

8. This grant will expire unless used within 2 years from the date of approval. A single, one-year time extension may be requested in writing and with payment of the applicable fee prior to such expiration date. Submittal of the recorded affidavit and payment of all required fees shall constitute use of the permit.

9. The subject property shall be maintained and operated in full compliance with the conditions of this grant and any law, statute, ordinance, or other regulation applicable to any development or activity on the subject property. Failure of the permittee to cease any development or activity not in full compliance shall be a violation of these conditions. The permittee **shall deposit** with the County of Los Angeles the sum of **$2,000.00**. The deposit shall be placed in a performance fund, which shall be used exclusively to compensate the Department of Regional Planning for all expenses incurred while inspecting the premises to determine the permittee's compliance with the conditions of approval. The deposit provides for **ten (10) annual** inspections. Inspections shall be unannounced

   If additional inspections are required to ensure compliance with the conditions of this grant, or if any inspection discloses that the subject property is being used in violation of any one of the conditions of this grant, the permittee shall be financially responsible and shall reimburse the Department of Regional Planning for all additional enforcement efforts necessary to bring the subject property into compliance. Inspections shall be made to ensure compliance with the conditions of this grant as well as adherence to development in accordance with the approved site plan on file. The amount charged for additional inspections shall be $200.00 per inspection, or the then-current recovery cost, whichever is greater.

10. Notice is hereby given that any person violating a provision of this grant is guilty of a misdemeanor. Notice is further given that the Regional Planning Commission or a hearing officer may, after conducting a public hearing, revoke or modify this grant, if the Commission or hearing officer finds that these conditions have been violated or that this grant has been exercised so as to be detrimental to the public's health or safety or so as to be a nuisance.

11. Upon receipt of this letter, the permittee shall contact the Fire Prevention Bureau of the Los Angeles County Fire Department to determine what facilities may be necessary to

protect the property from fire hazard. Any necessary facilities shall be provided as may be required by said Department.

12. All requirements of the Zoning Ordinance and of the specific zoning of the subject property must be complied with unless otherwise set forth in these conditions or shown on the approved plans.

13. All structures shall conform to the requirements of the Division of Building and Safety of the Department of Public Works.

14. All structures, walls and fences open to public view shall remain free of extraneous markings, drawings or signage that was not approved by the Department of Regional Planning. These shall include any of the above that do not directly relate to the business being operated on the premises or that do not provide pertinent information about said premises. The only exceptions shall be seasonal decorations or signage provided under the auspices of a civic or non-profit organization.

15. In the event of graffiti or other extraneous markings occurring, the permittee shall remove or cover said markings, drawings, or signage within 24 hours of such occurrence, weather permitting. Paint utilized in covering such markings shall be of a color that matches, as closely as possible, the color of the adjacent surfaces.

16. The permittee shall maintain the subject property in a neat and orderly fashion. The permittee shall maintain all areas free of litter and debris on the premises over which the permittee has control.

17. The subject property shall be developed and maintained in substantial compliance with the plans marked Exhibit "A." If changes to the site plan are required as a result of instruction given at the public hearing, a Revised Exhibit "A" shall be submitted to the Department of Regional Planning within sixty (60) days of the date of approval for the Conditional Use Permit.

18. The subject property shall be maintained in substantial compliance with approved Plot Plan No. 200900033, unless authorized changes are approved by the Director of Planning, Hearing Officer or Regional Planning Commission.

19. The sale of alcoholic beverages from a drive-through window is prohibited.

20. Permanent or temporary signs or banners advertising alcoholic beverages shall not be displayed on the exterior walls, fascia roof or windows.

21. Temporary window signs shall not exceed 25 percent of the area of any single window or of adjoining windows on the same façade frontage.

22. All State of California regulations regarding the sale and consumption of alcoholic beverages, including the prohibition of sale of alcoholic beverages to minors, shall be strictly enforced.

23. The permittee shall abide by all requirements and licensing or other established criteria for the sale of alcoholic beverages by the State of California Department of Alcoholic Beverage Control.

24. The permittee shall maintain a current contact name, address, and phone number on file with the Department of Regional Planning, Zoning Enforcement Section.

25. The conditions of this grant shall be retained on the premises at all times and be immediately produced upon request of any Sheriff, Zoning Inspector or Department of Alcoholic Beverage Control agent. The manager and all employees of the facility shall be knowledgeable of the conditions herein.

26. The permitee, and all managers and designated employees of the establishment, who directly serve or are in the practice of selling alcoholic beverages, shall participate in the LEAD (Licensee Education on Alcohol and Drugs) Program (or other State program if applicable) provided by the State of California Department of Alcoholic Beverage Control. This training shall be on-going, and all new designated employees shall be required to attend. The licensee shall display a certificate or plaque in a publicly accessible area of the establishment such as the lobby, indicating they have participated in this program. Proof of completion of the facilities' training program by employees, the licensee and all managers shall be available upon request.

MM:PE

7/7/10